The Ottawa T.I.99/4A Users' Group

VOLUME 8 NUMBER 2.....FEBRUARY 1989

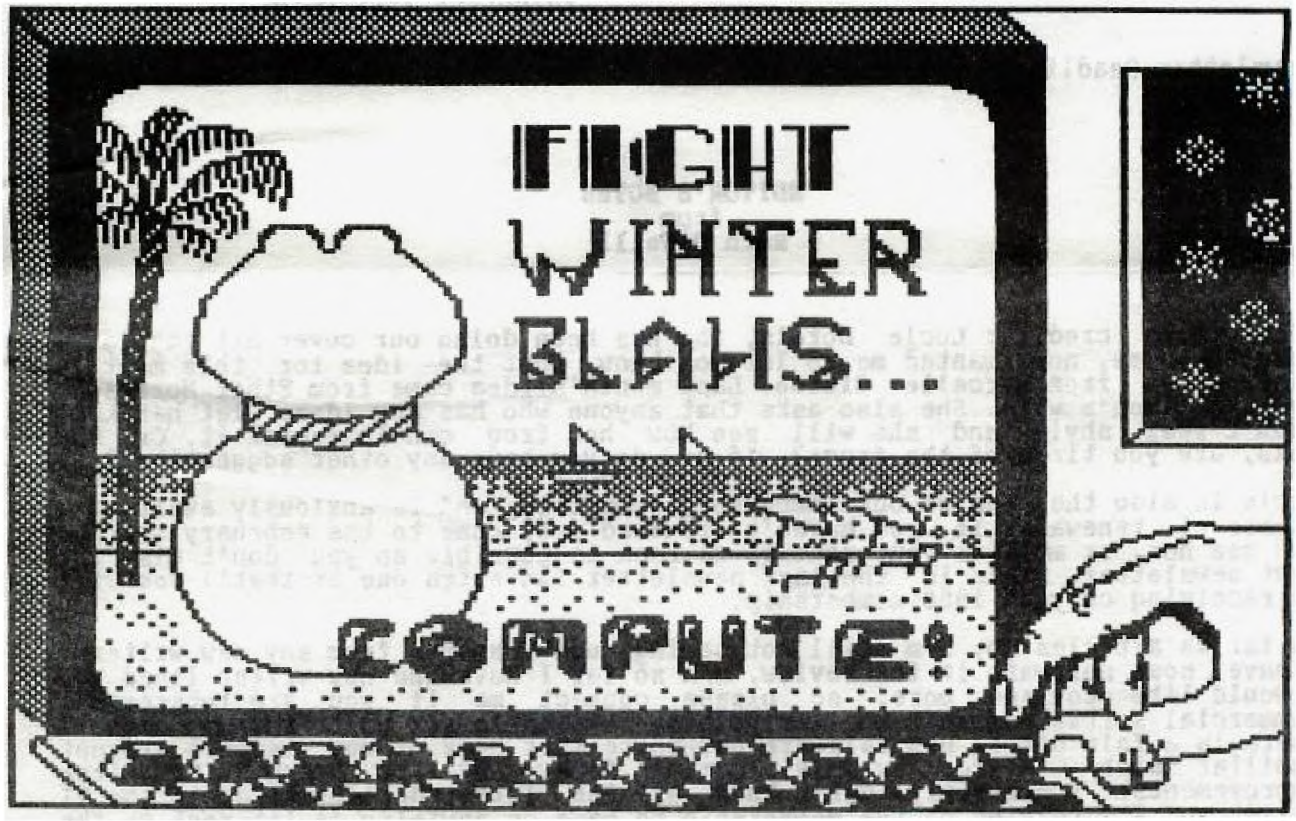

DON'T FORGET THE MEETING -- February 7, 1989
Special Guest -- DIDAK

P.O. BOX 2144,STATION D,OTTAWA
*** ONTARIO,CANADA K1P 5W3 ***

COMING EVENTS

Beginners' Assembly Language Class	February 4, 1989 1:00 p.m.	Merivale High School For more information Contact Bill Sponchia.
February Meeting:	February 7, 1989	Merivale High School Special Guest: DIDAK, on Floppy disk manufacturing.
March Meeting:	March 7, 1989 7:30 p.m.	Merivale High School
Cassette users' Workshop:	March 18, 1989	Merivale High School Contact Bill Sponchia for further information.
4th Annual TI-FEST	April 29, 1989	Merivale High School Contact Jane Laflamme for details or to volunteer your help.
Newsletter Deadline:	February 15, 1989	(or any time before that!)

EDITOR'S NOTES
from
Ruth O'Neill

First, some credits: Lucie Dorais, who has been doing our cover art regularly for some time, now, wanted me to let you know that the idea for this month's picture was from Marcelle Gibson. Last month's idea came from Ether Morrison, Dave Morrison's wife. She also asks that anyone who has any ideas let her know (don't feel shy!), and she will see how her frog can interpret it. Or, she asks, are you tired of the frogs? If so, do you have any other suggestions?

Lucie is also the head of our membership committee, and is anxiously awaiting a number of renewals. If you haven't renewed yet, come to the February meeting and see her, or mail us your renewal as soon as possible so you don't miss the next newsletter. This is the last newsletter (an extra one at that!) you will be receiving on your 1988 membership.

As far as articles go, I'm still not seeing much response from any new writers. I have some software in for review, and so far I have one new writer lined up. I would like to see more, so please contact me if you are interested. Commercial software isn't the only thing available for us to review, either. There is a fair bit of new fairware out there that some of our members are not familiar with -- for example, Carfax Abbey and Art Green's TI-Writer improvements. I certainly don't know all the latest developments in the TI world, so I'm relying on the membership to pass on anything of interest to the other members. The exchange of information is a vital part of our club. Please participate, in any way you can. Also, if you know of anyone who may have something to contribute and is just shy, give them a firm push in my direction. (Or just drop hints to the people around you.)

Remember, I'm always open to new ideas. Even if you don't feel you have time to write (although even a paragraph helps), please let me know if there is something you would like to read about.

The President's Two Cents' Worth
by Jane Laflamme

At the time of writing this article, I received a call from Charles Earl, saying that we had a very sick hard disk running on the BBS. Everything had to be shut down, backed-up, and re-initialized, before putting it back on line. "Would I mind lending a double density controller for running a floppy version?" Of course not! - and off we went. Boy, were my eyes opened from then on... I won't go into details, (except that we never did get a double density system going that night) but Peter Arpin, our SysOp, has been working with quite a few adversities. When I think of the times I have uploaded and without another thought, asked Peter to put the file here or there, and of course, the next day it is done, and now I know what he worked with to do it (the hard drive and Foundation card), I appreciate it so much more. I don't think I have taken the BBS or what Peter does for us for granted, but I don't think I have fully appreciated the work that he puts into it. Peter: On behalf of the User Group, thank you so much!! (Your salary is doubled, by the way.) Hopefully, by the time you are reading this, all the problems will be just memories...

And now to other news... It seems quite a few of us have let our membership renewal slip our minds! Remember, this is the LAST newsletter you will received if you don't renew, so why not do so right now? (There is a convenient little form you can fill out at the back of this Newsletter).

As of this date, we have quite a drastic fall in membership, and if this continues, we will have to cut corners financially. This includes our Newsletter, especially with the rate increase for postage. We had another "curve" thrown at us by the post office - in April, the Newsletter postage will cost even more than the recent increase in postage because it is unsealed -- not because of its size or weight. We have decide whether or not to put it into a letter size envelope. Are there are enough volunteers to carry that extra work to save on postage?

We were also wondering if we could ask for a token fee from the groups that receive our newsletter in exchanges. Would you be willing to send us approximately $10 to cover postage?

With a falling membership we have, of course, a falling income. We can't count on DM1000 as the market has been saturated by now, and those who wanted to donate a fairware sum have probably already done so. The executive have discussed how we can cut corners, and you can help too. A few of our members have set-up a "Recruiting Committee" and they have come up with some innovative ideas such as the flyer included in this newsletter. What a simple but fantastic idea! Please do your part to assist by posting it in a visible area. Even photostat and place a few more around, if you will. Our previous members will also be called to ask why they have not renewed. If their equipment has been sold to someone else, we will try and contact the new owners to see if they wish to join the club. A while ago, we requested a list of registered users from Texas Instruments which we received. The committee will phone those that are left in the area to enquire if they still have their computer. We are restarting membership drives at local malls for higher visibility. We will need volunteers and equipment on those days, usually Saturday, so please give it some thought when this is announced. Any amount of your time would be appreciated -- 10 minutes, an hour, or the whole day. It is actually a lot of fun, and you'd be surprised how much you learn when trying to show someone else our computer!

We've also had a suggestion that we should hold elections for the Committee Chair positions. This way, those of you that didn't want an executive position will have a chance to run a committee (or volunteer to help in a committee). It will give those who have run them for several years a chance to step down gracefully for a well-deserved rest, if they so desire. (As in most groups, there are the few that do most of the work and sometimes get "burnt out".) In other words, we would like more people to be involved with the group! You'll receive more by helping out YOUR club than you'll ever think possible.

Come out to the meetings. If you don't like what we are doing, tell us (nicely please!) or if you do, tell us that too. (And everyone is invited to the "meeting after the meeting" -- at McDonald's.) For the next meeting, February 7th, we are inviting DIDAK, located in Arnprior, to tell us how diskettes are made. Margit Haff and possibly others will be representing DIDAK at the

meeting. They are enthusiatic about coming, so please show that they are welcome by turning out in force -- and bring lots of questions! We will be following this up with a trip to Arnprior at a later date. As the factory runs 24 hours a day, an evening trip will be planned. More details to follow....

In the meantime, think of ways that you can help your club, or the club can pick up membership... Until next month,

Jane Laflamme

BROWSING THE LIBRARY
--with DAVE MORRISON

I would like to offer a few observations about our Library operations. As you are probably aware, most User groups who have a Disk of the Month system in place usually make up a disk of various programmes that members have either written or collected. We have chosen the alternate route of offering a complete disk of either fareware, public domain, or a combination of both. We have been extremely fortunate that sufficient new disks have become available making it unnecessary for the Librarian to delve into the Library and make a selection from our large collection of programmes.

On occasion, a member may ask me (at a monthly meeting) for a disk such as DM1000, FUNNELWRITER, or any of many disks that are in our Library. It is impossible for me to guess in advance what members will request and it is not feasible to have copies of all our popular disks at every meeting. As it stands, I bring a choice of over twenty disks (disks - not files) to every meeting. This means, incidentally, that over 100 disk are "tied up" more or less permanently! Some of the disks that have been requested are available on our Bulletin Board and I have found that the time taken for me to download, copy, verify, label, etc., these programmes is not justified by the sales at the meetings.

The point that I am attempting to make is that if you want a specific disk, programme, or file, whether it be in the Library or on the Bulletin Board (which may not be accessible to you), just let me know by telephone or BBS (if accessible), and I'll have the required item or items ready for you at the next meeting.

For those out-of-town members, we can still offer mail service, subject to the vagaries of Canada Post! We charge only for the exact postage with no handling fee!

TI-Trade-In

Stephen Bridgett read an interesting letter in Popular Electronics in the February, 1989 issue of that publication. A reader wrote in that anyone who has a problem with their unit (the console) can exchange it by returning it with $30.50 (assume US funds) plus postage, to:

Texas Instruments
Attn: Parts Department
2305 North University
Lubbock, Texas 79415

The phone number there is (806) 741-2265 or 2268.

Popular Electronics noted that they have checked this information out and found it to be correct. Pass it on!

Editor's note: This is an example of small but useful items that can be used to fill those pesky white spaces in the newsletter!

THE RECRUITING COMMITTEE WANTS

YOU!

Do you know someone with a TI who isn't using it because they don't know there is still support out there? If you don't, perhaps your neighbour or co-worker does... or perhaps they are even that person with a TI languishing in a closet somewhere. There are thousands of TI-994A's in the Ottawa area, and only a tiny fraction of that number of members in the Ottawa TI-99/4A Users' Group. Why? Many of those people don't even know we exist. Those who do know have very little idea of what we can offer them. At each of our Fests, people have come in off the street, or responded to our advertising, and expressed surprise at our existence. Before we can expand our membership, we need to tell these people about ourselves.

How can you help? Anything at all you can do will be greatly appreciated. Some of us have formed a new "Recruiting Committee", to promote awareness of the club and attract new members. Our first step is included in this newsletter. When you opened your newsletter this month, you may have been surprised to see the flyer that was included. The flyer isn't for you, exactly... it's for people who aren't in the club right now, and we're relying on you to put it where they can see it. Almost all of us have someplace nearby that welcomes informational flyers such as these... a supermarket or library bulletin board, a computer store window, or even an office bulletin board. If each of us takes the time to post just one flyer, we'll have done more than any one person could possibly accomplish. If you're feeling especially ambitious, make a few extra copies and spread the word a little further. You don't have to fill in your name or phone number.... the space is there if you want it, though. If you would LIKE to tell people about the group, by all means, make yourself an area contact. If you don't feel comfortable with that idea, just post the flyer as is, and interested people can call me. (That's the number included on the poster.) Even if you are not renewing your membership this year, please post the flyer, and help us out even as you leave.

The recruiting committee is fairly informal at the moment. We have some ideas, and would like more. We need volunteers, too. Individuals acting independently to promote our club are encouraged to continue doing so. Our most immediate need is for a team of people willing to make a few phone calls each to people in this area who once had a TI. The club has received about 5,000 mailing labels from Texas Instruments for people in this area who registered their purchase with TI. Now, we certainly can't afford a mailout of that size, but we CAN break that list down into manageable lists of people to telephone. If you think you can help out there, or in any other way, please call me at 234-8050.

Why do we need new members? Some members of the club feel that no matter how small we get, we'll still be able to enjoy our TI's together. That may be true, but the burden of planning and carrying out activities and providing the services of the club is falling on fewer and fewer shoulders. Those shoulders are getting tired, and if we have a larger membership, we'll have a larger number of people willing to take on the time-consuming (but VERY rewarding) tasks of managing the club and giving the general membership what they expect from us. We can also always use fresh ideas and points of view. We NEED to grow. Please help, in any way you can, even if it is just to encourage someone you know would like to, but just needs a little nudge. Thank you!

Ruth O'Neill

32K EXPANSION USING ONLY ONE 32K CHIP AND THREE SIMPLE GATE CHIPS

By David Caron

Well, quite a few things have happened over the holidays, including my success at making a 32k console memory expansion work with only one 32K chip.

In the past, I have simply used four 8K chips (HM6264LP-15), but rising costs of such chips have encouraged me to use only one 32K chip, which is much less costly than four 8K chips. This conversion is not as easy as it seems, though, since the TI-99/4A's CPU memory map has its 32K memory split into two sections, 24K of high memory and 8K of low memory, and the 32K memory chip is all continuous. Below is a diagram of the problem.

TI-99/4A's memory map	A0	A1	A2	32K Chip	A1	A2
console ROM	0	0	0			
Low 8K memory	0	0	1	------->|	0	0
Peripheral Expansion	0	1	0			
Cartridge ROM/RAM	0	1	1			
Memory mapped devices	1	0	0			
{ 24K of } (8K)	1	0	1	------->|	0	1
{ High } (8K)	1	1	0	------->|	1	0
{ Memory } (8K)	1	1	1	------->|	1	1

Notice that the computers A1,A2 correspond to the 32K chips' A1,A2 in all cases except for the low 8K where the computer's A2 must be inverted before being connected to the chips A2. This effect is achieved using five NOT gates and four AND gates as seen below.

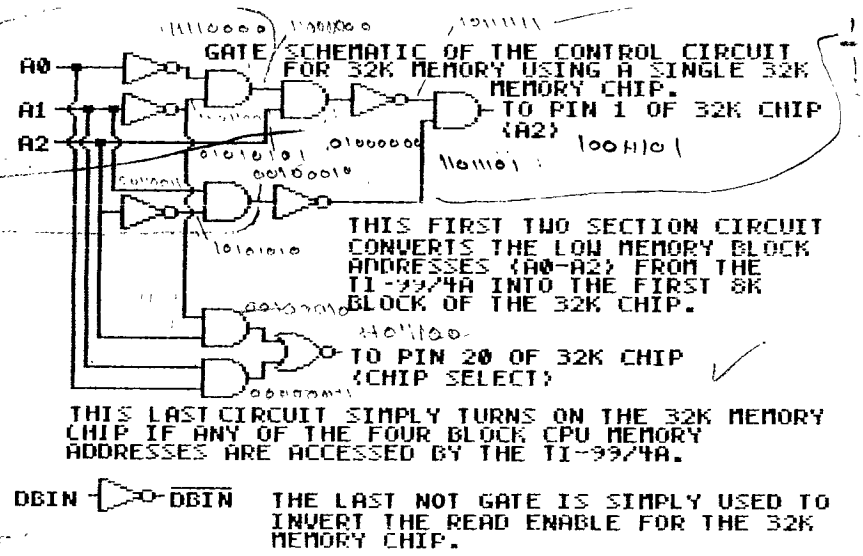

The second circuit in the diagram (the one with two AND gates and an NOR gate) simply turns the 32K chip on if the TI-99/4A accesses any of its four 8K blocks reserved for CPU memory. This circuit is incorporated in the 74LS51 IC. A sixth NOT gate is used to invert DBIN so that it is possible to use the positive DBIN present on the GROM extender (the right angled device which connects plug-in modules to the TI-99/4A) rather than soldering directly onto the mother board to get NOT DBIN. The 74LS04 chip we will be using consists of six NOT gates anyway so we will might as well make good use of the last NOT gate. Unfortunately, A0,A1 and A2 are not present on the GROM extender so it will be necessary to get those address lines off the mother board directly.

32K EXPANSION USING ONLY ONE 32K CHIP AND THREE SIMPLE GATE CHIPS

By David Caron

Well, quite a few things have happened over the holidays, including my success at making a 32k console memory expansion work with only one 32K chip.

In the past, I have simply used four 8K chips (HM6264LP-15), but rising costs of such chips have encouraged me to use only one 32K chip, which is much less costly than four 8K chips. This conversion is not as easy as it seems, though, since the TI-99/4A's CPU memory map has its 32K memory split into two sections, 24K of high memory and 8K of low memory, and the 32K memory chip is all continuous. Below is a diagram of the problem.

TI-99/4A's memory map	A0	A1	A2	32K Chip	A1	A2
console ROM	0	0	0			
Low 8K memory	0	0	1	------->	0	0
Peripheral Expansion	0	1	0			
Cartridge ROM/RAM	0	1	1			
Memory mapped devices	1	0	0			
{ 24K of } (8K)	1	0	1	------->	0	1
{ High } (8K)	1	1	0	------->	1	0
{ Memory } (8K)	1	1	1	------->	1	1

Notice that the computers A1,A2 correspond to the 32K chips' A1,A2 in all cases except for the low 8K where the computer's A2 must be inverted before being connected to the chips A2. This effect is achieved using five NOT gates and four AND gates as seen below.

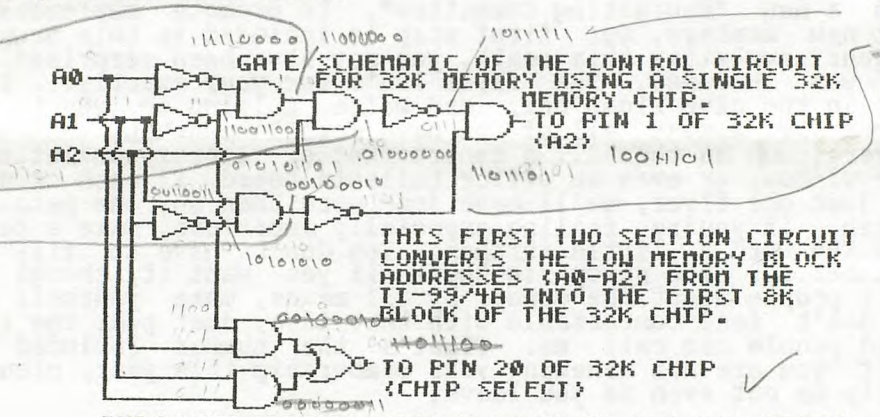

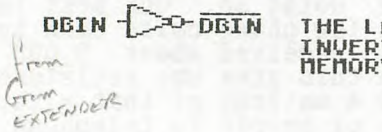

The second circuit in the diagram (the one with two AND gates and an NOR gate) simply turns the 32K chip on if the TI-99/4A accesses any of its four 8K blocks reserved for CPU memory. This circuit is incorporated in the 74LS51 IC. A sixth NOT gate is used to invert DBIN so that it is possible to use the positive DBIN present on the GROM extender (the right angled device which connects plug-in modules to the TI-99/4A) rather than soldering directly onto the mother board to get NOT DBIN. The 74LS04 chip we will be using consists of six NOT gates anyway so we will might as well make good use of the last NOT gate. Unfortunately, A0,A1 and A2 are not present on the GROM extender so it will be necessary to get those address lines off the mother board directly.

For those of you who do not have a pinout of the grom extender as seen from the REAR, (opposite end from where a module plugs in) here it is.

```
 36 34 32 30 28  26   24 22 20 18  16  14  12  10  8   6  4  2
+--+--+==+--+--+----+---+--+--+--+---+---+---+---+---+--+--+---+
|  |  |WE|A4|A5| A6 | A3|A7|A8|A9|A10|A11|A12|A13|A15|  |  |GND|
+--+--+--+--+--+----+---+--+--+--+---+---+---+---+---+--+--+---+
|  |  |  |  |  |DBIN|A14|  |5V|D0| D1| D2| D3| D4| D5|D6|D7|   |
+-------------------------------------------------------------+
 35 33 31 29 27  25   23 21 19 17  15  13  11  9   7   5  3  1
```

Unidentified pins do contain active signals, but we are not concerned with them. The pinout for the 32K chip is identical to that of the 8K chip except that pin 1 is now A2 and pin 26 is A1. In all cases A0 is the most significant address while A15 is the least significant. The same applies with D0 and D7.

MATERIALS:

1. 32K memory chip.
   (can be obtained from BOB BOONE for under 30$)
2. 74LS04 (Hex inverter)
3. 74LS08 (Quad 2-input AND gate)
4. 74LS51 (Dual AND/OR invert gate)
5. One 28 pin socket
6. Three 14 pin sockets
   (the last five items can be obtained from ACTIVE COMPONENTS)
7. Wirewrap wire and tool
   (easier for connections to the GROM extender, solder as well)
8. 47 microF capacitor.
9. Printed Circuit Board (one just large enough to contain the 32K chip and the three 14-pin chips.
   (The last two items can be obtained at ACTIVE COMPONENTS or Radio Shack)

```
                                        32K chip
                                        +------+
                                        |  1  28|- +5V
                                        |  2  27|- WE (NOT)
                                        |  3  26|- A1
                                        |  4  25|- A7
                                        |  5  24|- A6
                                        |  6  23|- A4
                                        |  7  22|- DBIN (NOT)
                                        |  8  21|- A5
                                        |  9  20|- chip select(NOT)
                                        |10  19|- D7
                                        |11  18|- D6
                                        |12  17|- D5
                                        |13  16|- D4
                                        |14  15|- D3
                                        +------+
```

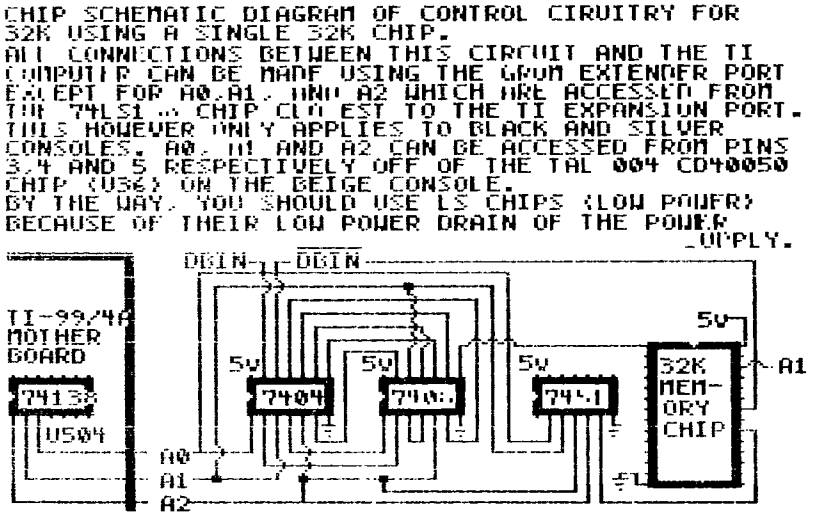

PROCEDURE:

1. Solder the three 14-pin sockets onto the printed circuit board as shown in the above diagram. The first socket will be used for the 74LS04, the second for the 74LS08 and the third for the 74LS51. Chose a convenient location for the 28-pin socket and solder it onto the board as well. The location of

this last socket will probably end up being oriented differently from the diagram's.

2. Wire up the connections between all the sockets.

3. Add the 47 MicroF capacitor between the 28-pin socket's ground and +5V. The shorter wire on the capacitor is usually the ground, but its leads should be marked.

4. Dismantle your TI-99/4A and remove the mother board. This action will of course void your warranty, but then, few of us need to worry about that nowadays.

5. Connect all address lines, data lines WE (NOT) and DBIN (NOT) between the GROM extender and the 28-pin socket which will contain the 32K chip. When doing so, be sure that all wires are about the same length and are all long enough to allow for versatility in positioning the printed circuit board. The easiest way of soldering the wires to the rear of the GROM extender is by first wrapping the bare wire around the pin.

6. Unplug the GROM extender from the computer (if you have not already done so), and remove the metal shielding cover. (Watch out for that white sticky heat conducting stuff! Do not let it touch anything!) Solder three wires onto pins 1, 2 and 3 of the 74LS138 chip closest to the expansion port for A2, A1 and A0 respectively. The other ends of course connect to the gate chips. Be sure to make them an ideal length with reference to the other wires.

7. Put the metal cover back on, threading the three wires from the 74LS138 chip around the mother board's GROM port and out an opening behind the space which is normally occupied by the computer's power supply socket. Plug in the GROM extender and place the printed circuit board somewhere so that it does not come into contact with the mother board's metal cover.

NOTE: For those with a beige computer, you will not find the 74LS138 because it has been replaced along with many other small chips, by a 40-pin chip, the TAL 004 CD40050 (or something like that). Anyway, A0,A1 and A2 can be accessed through pins 1, 2 and 3 of this chip respectively. In fact the metal cover will not exist either, so you will have to think up an ingenious way of holding the printed circuit board in place.

8. Test the memory either by performing a SIZE and a CALL INIT from TI-Extended Basic, or doing MXXX from the Debug option of Mini-Memory. If the computer fails to turn on (SHUT IT OFF IMMEDIATELY), it means that a wire is shorting with something, or else the memory is working at the wrong times, a symptom caused by incorrect signals on the chip select and/or DBIN (NOT) OR the data lines from the computer are not all going to data pins on the memory chip. If the computer does turn on, but the memory does not seem to function, then the memory chip is not receiving power, or some other wire on the memory chip is not properly connected.

9. Congratulations! Now that your 32K memory is working, insulate the bottom of the printed circuit board with tape, cardboard etc.. Tape the printed circuit board to the top of the metallic shield on the mother board, trying to cover as few ventilation holes as possible.

10. Put your TI-99/4A back together. (If you find this the hardest part of the procedure, then you're doing just fine.)

And that's all there is to it! I have to admit that it was not quite as easy as it looks due to an assumption on my part. I thought CALL INIT from the Extended Basic module would work if only the low 8K memory was there. This actually is true for some computers, but not for others. Although I did not actually test this circuit on my own TI computer (I used my uncle's TI as the guinea pig, but it worked, so who cares, even if he did buy himself a nice IBM system by the time I finally got the 32K memory going?) it works fine on a black and silver console. Theoretically it should also work on a beige console, using the mentioned modification, Good Luck!

ATTENTION: The assembly program in my article from the January 1989 newsletter has a major bug. This is rather obvious from the fact that the constant STRING

(page 7, line 27) has not been defined. The following changes must be made to make the routine work the way it was intended.

1. Add the following code between line 8 and 9 on page 7. In other words, add the following code after "MOV R3,R0"

```
       MOVB STRBUF,R4  *Copies the first byte at STRBUF (the *byte
                       *containing the length of the string) into
                       *the 8 most significant bits of R4.
       SRL  R4,8       *shifts the string length into the least
                       *significant 8 bits of R4. The most
                       *significant 8 bits are set to "0".
       AI   R4,STRBUF  *adds the address of STRBUF to R4.
```

2. Change line 27 from CI R2,STRING+4 TO:

```
       C R2,R4         *compares the value of R2 to R4. R4
                       *contains the address of the last byte of
                       *the string. When R2 becomes greater than
                       *R4 then all characters in the string S$
                       *will have been displayed out to the screen
                       *and the loop will stop.
```

3. Change line 34 from LWPI >837C TO:

```
       LWPI >83E0      *LWPI >837C was just a typo error.
```

BEGINNERS' ASSEMBLY
report by Ralph Kuhn

The Beginners' Assembly Workshop has started!

We held the first meeting at Ms. Laflamme's. Thanks as always, Jane, for being so gracious and making all of us feel welcome. The next meeting is scheduled for a classroom at the Merivale High School, on Feb. 4, at 1 p.m. Bring your problems, questions, suggestions, and your enthusiasm.

Anyone interested in learning Assembly is welcome to join in, listen to some of our shared experiences, and hopefully to take away some of the mystery of Assembly. The "teachers" are not experts, by the way; they are learning along with the group. So feel free to correct, criticize, or suggest improvements.

The book we will be following is Ralph Molesworth's "Introduction to Assembly Language for the TI Home Computer". We will be referring to the Editor / Assembler manual and other books throughout the meetings, and as in any Assembler, the more books on the subject you read, the better your background.

For people who don't have a copy of the Molesworth book, arrangements can be made, so all you need to come to the meetings is:

1. an interest in Assembly on the TI 99 4/a and
2. the will to try it.

You don't need to be a technical wizard, an electronics expert, or any sort of genius. It's more complicated than BASIC, but then you couldn't produce bit-map graphics (full screen graphics), 40 column text, Multi-colour mode, or get the full speed and flexibility of the machine in BASIC that you can in Assembly.

Come on out and watch the mysteries dissolve... If we can't answer your questions, I'm sure we can point out a source of more detailed information. We have some incredibly talented members in our group, and we're looking for more to come up through the ranks.

See you there!

FAST EXTENDED BASIC

LUCIE DORAIS

In the deep of Winter, we start thinking about Spring... and taxes! Get your calculator ready... but is a calculator the best thing to use? How often did you, like me, type in a wrong number, but did not realize it until it was too late? If only you could go back and correct it, then automatically update the total. And how often did you wish that your calculator could print all your work, so you could double-check your figures? MULTIPLAN could be used, but it is so cumbersome... and, like me, you might have got rid of it because you never really needed that much power.

The program for this month does it all, and more. Called ADD-SUB, it also multiplies and divides, keeps each line's arithmetic operator (+-*-) and subtotal in memory for quick reference, and allows you to go back and change any figure. When printing, it also gives you the subtotal at each line, so finding your error (if you still have one) is much easier. The total number of values it can hold is only 39 (screen limitations), but upon exit, if you Rerun the program, you can Carry Over your Total, allowing for much longer lists. But if you wish to print, you need to do it before you re-run the program.

I wrote it over two years ago; while revising it, I realized it contained a little bit of everything I explained in the past months, including user-defined subs and relational expressions. If you followed my series from the beginning, you should not have too many problems understanding the program, so instead of explaining it line by line, I will just point out some difficulties.

```
100 REM ** ADDSUB ** L.Dorais/Ottawa U.G./July 86, rev. Jan. 89
110 !
120 IMAGE ########.##
130 ON WARNING NEXT :: DIM SI$(39),MT(39),ST(39)
140 DATA 70,65,84,79,32,83,000000FFFF0000,000000FFFF181818,181818FFFF,
    181818181818181818
150 GOTO 170 :: A$,COL,K,L,L$,LL,OP$,PR$,RET,ROW,S,SIG$,TC,TOT,TR,X,Z$ ::
    CALL KEY :: CALL CLEAR :: CALL ACPT :: CALL CALC :: CALL DL
160 CALL CHAR :: CALL HCHAR :: CALL VCHAR :: CALL COLOR :: CALL CHARPAT :: !@P-
170 DISPLAY AT(3,10)ERASE ALL:"ADD-SUB": : : : :"STATUS LINES:"
180 DISPLAY AT(11,5):"F  CURRENT FUNCTION": :"    A  ACCEPT INPUT": :
    "    T  CURRENT TOTAL": :"    O  OPTIONS"
190 FOR X=48 TO 57 :: CALL CHARPAT(X,A$) :: CALL CHAR(X+48,A$) :: NEXT X
200 FOR X=106 TO 111 :: READ S :: CALL CHARPAT(S,A$) :: CALL CHAR(X,A$) ::
    NEXT X :: CALL CHAR(128,"001018FCFC1810")
210 FOR X=114 TO 117 :: READ A$ :: CALL CHAR(X,A$) :: NEXT X ::
220 CALL COLOR (9,1,1,10,1,1,11,5,1) :: CALL CLEAR
230 CALL VCHAR(1,16,117,20) :: CALL VCHAR(1,3,110,10) :: CALL VCHAR(11,3,97,10)
    :: CALL VCHAR(1,18,98,10) :: CALL VCHAR(11,18,99,10)
240 FOR X=1 TO 10 :: S=95+X :: CALL HCHAR(X,4,S) :: CALL HCHAR(X,19,S) ::
    CALL HCHAR(X+10,4,S) :: CALL HCHAR(X+10,19,S) :: NEXT X
250 CALL COLOR(9,5,16,10,5,16) :: OP$="m+-*/ [C]ORR [S]UBTOT [E]XIT" ::
    Z$="rrrrrrrrr"
260 DISPLAY AT(21,1):"rrrs"&Z$&"ts"&Z$&"rrrr":"j +uk[*9 SP*]ul":"rrrtr"&Z$&"t"
    &Z$&"rrrr":OP$ :: DISPLAY AT(22,18):USING 120:TOT
270 L=1 :: SIG$="+" :: DISPLAY AT(1,3)SIZE(11):USING 120:TOT :: CALL
    HCHAR(2,2,128)
280 ! ** main program **
290 CALL ACPT(L$,L+1,SIG$,MT(L),ROW,COL,X,0) :: IF X>0 THEN GOSUB 360 ::
    DISPLAY AT(24,1):OP$ :: GOTO 290
300 CALL CALC(SIG$,TOT,ST(L),MT(L)) :: SI$(L)=SIG$ :: TOT=ST(L)
310 L=L+1 :: CALL HCHAR(ROW,COL-2,32) :: IF L=40 THEN 340
320 ROW=ROW+1 :: IF ROW=21 THEN ROW=1 :: COL=19
330 CALL HCHAR(ROW,COL-2,128):: GOTO 290
340 CALL DL(0,"NO MORE SPACE!") :: DISPLAY AT(24,1):"k   "&SEG$(OP$,6,23)
350 ACCEPT AT(24,3)VALIDATE("CSE")SIZE(1):L$ :: GOSUB 360 :: GOTO 340
360 RET=0 :: ON POS("CSE",L$,1) GOTO 380,430,490
370 ! ** correction **
```

```
380 A$="CORRECT" :: GOSUB 450 :: IF RET THEN RETURN ELSE IF L=40 THEN
    CALL DL(1,"j  uk")
390 CALL ACPT(L$,LL+1,SI$(LL),MT(LL),K,S,X,1)
400 FOR X=LL TO L-1 :: CALL CALC(SI$(X),ST(X-1),ST(X),MT(X)) :: NEXT X
410 TOT=ST(L-1) :: GOSUB 470 :: RETURN
420 ! ** show subtotal **
430 A$="SUBT.AT" :: GOSUB 450 :: IF RET THEN RETURN
440 DISPLAY AT(24,1):USING "[ENTER ]      ol ########.##":ST(LL) ::
    ACCEPT AT(24,7)SIZE(1):A$ :: GOSUB 470 :: RETURN
450 DISPLAY AT(24,1):A$&" LINE? (0=NONE)" :: ACCEPT AT(24,24)VALIDATE(DIGIT)
    BEEP:LL :: IF LL<=0 OR LL>L-1 THEN RET=1 :: RETURN
460 S=LL+1 :: TR=S+20*(S>20) :: TC=2-15*(S>20) :: CALL HCHAR(ROW,COL-2,32)
    :: CALL HCHAR(TR,TC,128) :: RETURN
470 CALL HCHAR(TR,TC,32) :: IF L<40 THEN CALL HCHAR(ROW,COL-2,128) :: RETURN
    ELSE RETURN
480 ! ** exit/print **
490 CALL DL(0,"EXIT OPTIONS:") :: DISPLAY AT(24,1):"  [P]RINT  [R]ERUN  [Q]UIT"
500 CALL KEY(0,K,S):: IF S=0 OR K<80 OR K>82 THEN 500 ELSE ON K-79
    GOTO 510,600,560
510 CALL DL(0,"PRINT") :: IF PR$="" THEN DISPLAY AT(24,1):"PRINTER: PIO" ::
    ACCEPT AT(24,10)SIZE(-19):PR$
520 OPEN #1:PR$ :: PRINT #1:CHR$(27)&"@"
530 FOR X=1 TO L-1 :: PRINT #1,USING "[*10 SP*]#   #####.##     =  ######.##":
    SI$(X),MT(X),ST(X) :: NEXT X
540 PRINT #1:RPT$(" ",13)&"_________" :: PRINT #1 ::
    PRINT #1,USING "[*11 SP*]########.##      TOTAL":TOT
550 PRINT #1 :: CLOSE #1 :: GOTO 490
560 CALL DL(0,"RERUN") :: DISPLAY AT(24,1):"lml  [N]EW(0)  [C]ARRY OVER"
570 CALL KEY(0,K,S) :: IF S=0 OR(K<>67 AND K<>78) THEN 570 ELSE IF K=78
    THEN TOT=0
580 FOR X=6 TO 15 :: CALL VCHAR(1,X,32,20) :: CALL VCHAR(1,X+15,32,20) :: NEXT
590 CALL HCHAR(ROW,COL-2,32) :: GOTO 260
600 CALL CLEAR :: END
610 !@P+
620 SUB ACPT(L$,L,SIG$,MT,R,C,P,CR) :: DISPLAY AT(22,3)SIZE(1)BEEP:SIG$
630 ACCEPT AT(22,7)SIZE(8)VALIDATE(DIGIT,".CSE+-*/"):L$ :: IF L$="" THEN 630
    ELSE S$=SEG$(L$,1,1)
640 IF CR=0 THEN P=POS("CSE",S$,1) :: IF P THEN SUBEXIT
650 X=ASC(S$) :: IF X=46 OR(X>47 AND X<58) THEN 670
660 IF POS("+-*/",S$,1)=0 THEN 630 ELSE SIG$=S$ :: DISPLAY AT(22,3)SIZE(1):SIG$
    :: GOTO 630
670 MT=VAL(L$) :: R=L+20*(L>20) :: C=4-15*(L>20) :: DISPLAY AT(R,C)SIZE(10):
    USING "# #####.##":SIG$,MT :: SUBEND
680 SUB CALC(SIG$,OT,NT,MT) :: ON POS("+-*/",SIG$,1) GOTO 690,700,710,720
690 NT=OT+MT :: GOTO 730
700 NT=OT-MT :: GOTO 730
710 NT=OT*MT :: GOTO 730
720 NT=OT/MT
730 DISPLAY AT(22,18):USING 120:NT :: SUBEND
740 SUB DL(X,A$) :: CALL HCHAR(21,6,114+X) :: CALL HCHAR(23,6,114+X+X) ::
    DISPLAY AT(22,1)SIZE(14)BEEP:A$ :: SUBEND
```

In the above listing, I have replaced long strings of spaces by a [*n SP*] notation; don't type it, but type the n number of spaces, then the other characters in the strings. In line 540, the quoted string is made up of nine underline characters.

When you RUN the program, you are given quick instructions while the program initializes, then the screen clears, and soon the line numbers appear in inverted colors (trick: make them transparent in line 210, design the screen in lines 230-240, then color them in line 250). Screen line 0, upper left, contains your starting total; this line cannot be accessed by Subtotal or Correction.

Two status lines at the bottom indicate the current Function, or operator (+-*/), the current Total, the available Options you can enter besides values (+-*/, plus "S" for Subtotal, "C" to correct a line, and "E" to exit to more goodies). All the inputs are Accepted in the upper status line, at the "A" prompt.

You need to start with a value: the default operator is "+", but you can change it any time before entering a new value. When all 39 lines are filled, you cannot enter any new value, but you can still ask for a Subtotal or a Correction. Upon Exit, you are asked if you want to [P]rint the list (with operators and subtotals for each line), [R]erun the program, with the option to Carry over the current total, and [Q]uit.

A note about Printing: this has to be done each time you reach the limit of 39 lines, or before you want to run the program again, since each Rerun starts a new list and re-fills the arrays containing each line's operator, kept in SI$(), its value MT(), and its subtotal ST(). This is better than a printing calculator, since here you can make all the corrections you want before printing.

Please pay attention to line 260: the lower case letters are redefined characters for bars, digits, and some upper case letters that are shown as blue on white, as are the line numbers; in particular, this is a lower case "l" (redesigned as a "T") after the "u", not the digit "1"; the same "l" is also found in line 440, which displays "ST" in white and blue, and in line 560, which displays "TOT".

The main portion starts with a CALL to a user-def sub ACPT; the parameters are L$, the input, that needs to be brought back to be used in the sub line 360 if it is "CSE"; L+1, the array position plus one, since array position one is displayed on screen line two, and so on; the current operator (sign) SIG$, the amount MT(L) carried back from the sub, which had derived it from the value of the L$ input if it was a number; the correct ROW and COL to display the next arrow; X is a variable that carries back the position of "CSE" if needed; finally, the digit "0" is read by the sub as CR=0, meaning this is not called from the Correction portion of the program. As you can see, some parameters work one way, some the other way, and some, like SIG$, work both way, and can be changed in the sub; the important thing to know is that all the parameters passed must be in the CALL and must also be found in the SUB title (line 620).

That is why, when we CALL ACPT from the Correction portion (line 390), some parameters are dummy ones: K,S,X have to be put in, but the values they bring back from the sub (row, column and position of "CSE") are useless to that portion of the program; on the other hand, the last parameter, the digit "1", tells the sub that it is called from the Correction portion, so it will not check for "CSE" (line 640 in the sub); if you enter it by error while doing a Correction, Tex will just ignore it and display the bottom option line, as it will do if you enter any unwanted value in the input. The other parameters passed from Correction are the same as from the main portion, but this time the array position is LL+1, and the operator and the amount are those of that LL position, not the current ones. You can of course change the function before entering your new correct value.

The second user-defined sub, CALC, does the actual calculation; it is kept separate from the ACPT one because when we are correcting a line, this sub is accessed for each array position following the correction, to bring our total up to date in line 400. The parameters differ more from those passed by the main program (compare lines 300 and 400): the operator is that of the value to be corrected, not the current one; the parameters read by OT (old total) and NT (new total) in the sub are the previous line's subtotal and the corrected line's subtotal, while in the main portion they are the old total TOT, and the new total, which also becomes the subtotal for this line, TOT itself being updated upon return from the sub (updating it in the sub before returning would end up in incorrect values brought back to the Correction portion); the MT passed to the sub from both CALLs is of course the value entered for the current or corrected line.

The relational expressions can be found in lines 460 and 670, and both relate to the fact that a screen line number is either in the left column or the right, therefore smaller than 20 or not. This is used to display our input on the correct screen line (line 670), or to display and erase a temporary arrow while doing a Subtotal or a Correction (lines 460-470, two normal subs).

This is all for now, so enjoy doing your Taxes! I hope you get a big return...

TI BASIC continued from January
by **Steven Shaw**

Also with Extended Basic, 8k is available to load machine code into, such as some of the TI module games (loaded from disk) or the utility programs which are becoming available.

The memory expansion is available to the Editor Assembler and the Mini Memory modules for loading longer machine code programs from disk.
The Mini Memory can use the memory expansion as a data file.

Some TI Modules (such as Editor Assembler) require that the 32k be connected.

NB: The Personal Record Keeping module CANNOT use the 32k memory.
In extended basic a very small increase in speed is produced by using the 32k memory.

PRINTERS

The RS232 card is required to connect the computer to a printer.

A number of independent suppliers are producing programs and hardware to permit printers to be connected without the box and RS232 card, but you should look closely at what their products can do, and try to see them working with your printer.

The TI RS232 card provides a potential three interfaces, two serial and one parallel.

A SERIAL connection is one in which the signal is sent one bit at a time. As a single letter is defined in one BYTE (8 bits) a serial interface has to break that down and send the bits one at a time.
The standard serial interface is known as RS232, and implies a standard connector and standard pin connections in that connector. However, there are variations in usage.
The TI RS232 interface permits you to set certain options in your Basic program, allowing a range of printers to be used.
However, some printers have serial interfaces which operate at different signal levels, and you should always try to see a printer working with the 99/4A before you buy.
There are a number of options available with the TI RS232 card, and you may need to check with your dealer the correct options to use with your printer.
The following are the options available with the RS232 interface:
BAUD RATE (eg speed): 110,300,600,1200,2400,4800, or 9600
DATA BITS: 7 or 8
PARITY: Odd, Even or None
TWO STOP BITS: used or not
NULLS: used or not
CHECK PARITY: performed or not
ECHO: on or off
CRLF: on or off
LF: on or off.

These options should allow you to interface to almost any serial printer. The RS232 interface is bidirectional and can be used (if you have a P.O. approved modem) to link consoles by telephone for the exchange of programs or data. It is possible for data to be passed in both directions simultaneously using the RS232 interface.

For many printers, an RS232 interface is an option available at extra cost : the standard interface is PARALLEL. A parallel interface sends one byte at a time, and operates only in one direction. The TI RS232 card can send data at about 28000 Baud when using the parallel signal output, but the limitation will be the receiving device.
There are fewer options needed on the parallel interface, as a new signal is only sent when the printer tells the computer it is ready for it by means of a

'handshaking' signal. It is possible to turn on or off the echo, automatic carriage return and automatic line feed features. Your choice will depend on the needs of your printer.

A few printers have a buffer memory, or one may be added: this allows the computer to send its data to the buffer and then carry on with your program, and your program continues while the printer takes data from the buffer and prints out your text.

NB: Although Centronics compatible, the TI parallel output uses a slightly different pin out, and your dealer will have to make a special cable for you. Ensure the printer you buy will work with your computer, before buying.

You DO NOT have to purchase the TI Printer. Most printers will work with the RS232 card.

SPEECH SYNTHESISER

The speech synthesiser has already been touched on in the discussions of Extended Basic and the Terminal Emulator Two modules.

The Speech Synthesiser requires a module to function. Some of the newer games modules (such as Parsec and Alpiner) use it, and you may use it in your own programs:

In TI BASIC: with Terminal Emulator 2 or Speech Editor
In Extended Basic: with the Extended Basic module.

Both Extended Basic and Speech Editor have limited vocabularies, but it is possible to extend them slightly by adding words together or curtailing them.

Terminal Emulator 2 gives the fastest and most realistic speech and permits pitch and emphasis to be changed.

A number of small companies are showing an interest in producing peripherals for the TI99/4A. These may be cheaper than the TI equivalent, but you must ensure that they satisfy your requirements before you buy, as they may not have all of the TI features.

You should always try to see any third party peripheral working with the computer before you buy.

NEW LOCATION FOR CDU!

Computer Download Unlimited at last is settled in a new location:

Computer Download Unlimited
8 Talon Street
North Bay, Ontario
P1A 1N5

Phone: (705) 476-9391 (Voice)
(705) 476-3043 (BBS 300/1200)

All the best in your new home!

HOTLINE NUMBERS

The executive has expressed a desire to assist all members should you have some problems or questions, want to do some library swapping or borrow a book. This will be the place to look. Listed here are the members of the executive, committee heads, and others in the group willing to help in their specialized areas. Of course, if you wish to be placed on the list, just give me a call. I know there is a lot of expertise within our Group, so I hope to add to this list. Please respect normal hours unless you specifically know that someone doesn't mind a call at 3am, or use the BBS to leave a message at 738-0617, 24 hours a day, 7 days a week.

JANE LAFLAMME	PRESIDENT	(H) 837-1719 or (W) 745-2225
AL PALMER	VICE PRESIDENT	594-9216
MARCELLE GIBSON	SECRETARY	233-2384
BILL SPONCHIA	TREASURER	523-0878
MICHAEL TAYLOR	PAST PRESIDENT	831-0143
PETER ARPIN	SYSOP	523-0017
RUTH O'NEILL	NEWSLETTER EDITOR	234-8050
TONY HOPKINS	ADVERTISING	746-4463
DAVE MORRISON	LIBRARY CHAIRMAN	737-4889
JACK McALLISTER	CASSETTE LIBRARY	225-6989
HENRI MONAT	ARCHIVES	824-0941
LUCIE DORAIS	MEMBERSHIPS	232-0393
BOB BOONE	HARDWARE/SOFTWARE	(705) 476-9391
ART GREEN	ASSEMBLY HELP	837-1955
DICK PICHE	TECH	521-8667
CLUB BBS	SET MODEM TO 8N1	738-0617

1989 RENEWAL $25.00

NEW MEMBERS $25.00

NAME _____

ADDRESS _____

CITY _____ PROVINCE/STATE _____

POSTAL CODE _____ TELEPHONE (____)_____

Please make cheque payable to the Ottawa TI-99/4A Users' Group and send it, along with this form, to the address shown on the cover page -- or better still, bring both to a meeting.

FROM

P.O. BOX 2144,STATION D,OTTAWA
*** ONTARIO,CANADA K1P 5W3 ***

EDMONTON 99er USER'S GROUP
P.O. BOX 11983
EDMONTON, ALBERTA