NEWSLETTER 9T9

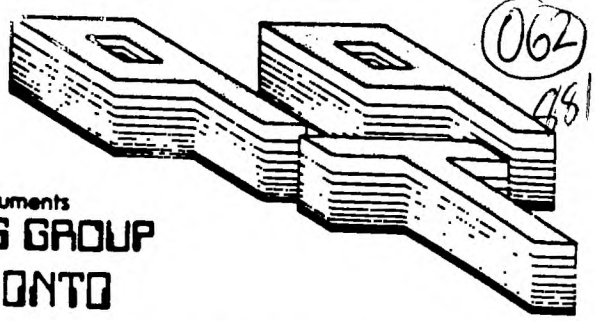

(062) 0810

Texas Instruments
USERS GROUP
TORONTO

FOR THE TI-99/4A COMPUTER
and compatibles

OCTOBER 1988
ISSUE

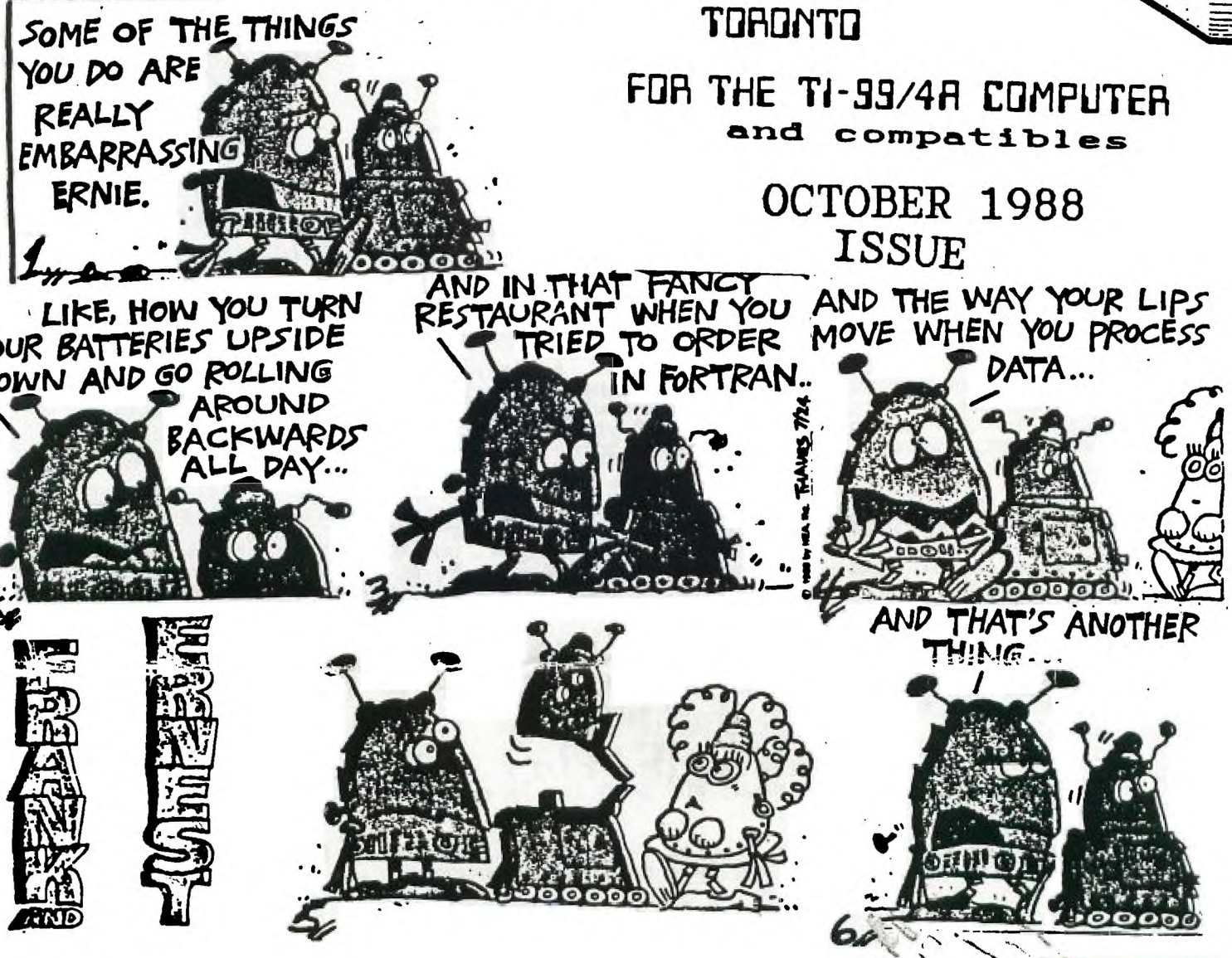

FROM:
9T9 Users Group
109-2356 Gerrard St.E.
Toronto,Ont.,M4E-2E2
CANADA

TO: Edmonton 99' er Users Soc
P. O. Box 11983
Edmonton, AL T5J 3L1

9 T 9 U S E R S G R O U P

E X E C U T I V E C O M M I T T E E

PRESIDENT Steve Mickelson 657-1494
VICE-PRESIDENT Neil Allen 255-8606

SECRETARY/MEMBERSHIPS Randy Rossetto 469-34(
TREASURER Peter Sandford 855-2107
OFFICER AT LARGE Cecil Chin 671-2052
LIBRARY DIRECTORS Gary Bowser 960-0925
Andy Parkinson 275-4427
Steve Findlay (416)727-6807

PAST-PRESIDENT Lloyd Lindsay 743-3868

N E W S L E T T E R E D I T O R

Steve Mickelson 657-1494
Associate Ed. Blair MacLeod 658-1416

"I asked my Mom to get me some wire and alligator clips...So she gets me jumper cables."

M E M B E R S H I P F E E S

FULL MEMBERSHIP	$30.00 / year
NEWSLETTER SUBSCRIPTION	$20.00 / year

All memberships are household memberships. An newsletter subscription is only for those who do not wish to attend meetings, but wish to receive our newsletter and have access to our library. You are welcome to visit one of our general meetings before joining the group. If you wish more information contact either our president, in writing, at the club address on the front cover or phone him.

The meetings are usually held on the last Thursday of each month, unless stated otherwise. Consult this issue of Newsletter 9T9 for the date and time of the next meeting. Meetings are held at the third floor meeting room of Canada Remote Systems, 4198 Dundas St. West,(Dundas, one block east of Royal York Road), starting at 7:30 PM and ending at 10:30 PM. No meetings are held in the months of July and August. December's meeting usually takes place the second week of the month.

C O M M E R C I A L A D V E R T I S I N G

Any business wishing to reach our membership may advertise in our newsletter. The rates are as follows. (height by width):

FULL PAGE	(10" x 7")	$50.00
HALF PAGE	(7" x 5")	$25.00
QUARTER PAGE	(7" x 2 1/2")	$15.00

Please have your ads camera ready and paid for in advance. For more information contact the editor.

Don't forget, that any member wishing to place ads, may do so free of charge as as long as they are not involved in a commercial enterprise.

N E W S L E T T E R A R T I C L E S

Newsletter 9T9 is published ten times a year by the 9T9 users group. Members are encouraged to contribute to the newsletter in the form of articles, mini programs, helpful tips, hardware modifications, jokes, cartoons and questions. Any article may be submitted in any form by mail or modem. We welcome the reprinting of any article appearing in this newsletter providing credit is given to the author and 9T9. If more information is required, call the editor. The name **9T9**, **Nine-T-Nine**, **Newsletter 9T9**, **Nine-T-Nine Users Group**, and **9-T-9 Users Group** are Copyright,(c), 1988 by the 9T9 Users Group, all rights reserved.

D I S C L A I M E R

9T9 Users Group is an independent, non-profit association of Texas Instruments TI-99/4A and Myarc 9640 users, and is not a part of Texas Instruments. Opinions expressed in this newsletter are those of the writers and are not necessarily those of the 9T9 USERS' GROUP. 9T9 cannot assume liability for errors or omissions in articles, programs or advertisements. Any hardware modification or project is presented for informational purposes, and the author, newletter editor, and/or 9T9 Users Group cannot be held liable for any damage to the user's equipment. All such projects are done at your own risk!

C L U B B B S

The 9T9 Users Group sponsors the TI Tower BBS, (416)921-2731, 300/1200 BPS, 24 Hrs. Sysop: Gary Bowser.

OCTOBER 1988

TId Bits #22

-By Steve Mickelson, President 9T9 Users Group, Toronto
Compuserve 76545,1255; Delphi SMICKELSON; GEnie S.MICKELSON

This Issue:

This issue of the newsletter is not much a solo issue, as the last one, thanks to the contributions of Steve and Randy. Those of you who wish to contribute to the newsletter may still do so.

As we near the end of this membership year, it time to remind fellow members that membership renewals and elections are just a couple of months away. It is, also, a time for me to reflect upon the state of the 9T9 Users Group, past, present and future.

October, 1988, marks the fifth anniversary of the "orphanage", much has happened in the last half decade. It is truely amazing that a computer system, first introduced as the 99/4, came about around the same time as the origional Apple and Radio Shack computers, and only a couple of years after the Altair and Ohio Scientific computers, and is still viable! We must give credit to Texas Instruments, even though they ceased to manufacture the 99/4A, had already assisted in the establishment of a network of user groups,(how many of those still around have a club constitution based in whole or part on that sample produced by TI's corporate legal department?). These groups, in turn, had established a communications network through commercial databases, as The Source, Compuserve, Delphi and GEnie; not to mention TI BBS', newsletter exchange programs, TI-dedicated bi- lines and publications. Third party manufactures picked-up the slack, left by TI, and responded to the hardware and software needs of the users.

It is ironic, that the robustly built computer, which was orphaned by the cheaper Vic 20, has managed to outlive its adversary, both because of its advanced design, as well as the strength and dedication of YOU, the users. I would like to salute the dedicated users and manufacturers, who refuse to let this orphan die.

Our club has taken a rough and rocky road, as well. We started as a huge group of 500 or so members, mostly using consoles with tape drives, for data storage. While our membership has dwindled to less than 20 % of the origional; the majority still use their TI regularly, many now having expanded systems, some even with multiple systems in the household. The knowledge and experience level of many members is truely impressive. Still, we find many users who, do not find the need to expand, or have obtained a system from a friend, relative or flea market.

It is to this new enthusiast, our club's resources must be made available, for the new guy is going through the same learning curve that many members have five or more years ago. Chris Bobbitt, in his latest issue of Asgard News, reflected upon the importance of maintaing support for the new or unexpanded system user. Bobbitt complained that the downfall of many users groups, like the recently dissolved MSP group, has not been a result of our computers being orphaned, but rather the problem where an experienced TI user decide he has neither the time or inclinationation to support his club or fledgling TI user. Since I personally feel this is the heart of the most pressing issue to threaten the viability and survival our user group, or any other, for that matter, I've included this article below:

Editorial

User groups are widely acknowledged as the rock on which the TI community is built. They are responsible for bringing users together to share ideas, complaints, and focusing on activities that benefit all users. Where would the TI world be without the work of the Ottawa User Group and its DM1000? The Hunter Valley User Group and its Funnelweb environment? Every day you and I use programs that were either developed or tested by user groups.

However, the user groups are dying.

It isn't simply a matter of losing members any more (though even the large Chicago TI User Group is losing members now), groups are actually disappearing, in startling numbers. The Minneapolis/St. Paul User Group packed it bags six months ago, and smaller groups throughout the country are dying like wheat in drought-parched Kansas.

Long villified as havens for pirates, some software vendors will welcome their demise. However, those that give any thought to the matter will realize that ultimately user groups are very much the key to the survival of the TI community, and those hardware and software vendors that support it. They provide the essential local link, or interface, between vendors and users all over the country. They serve to disseminate information (through meetings, workshops and newsletters) about the vast wealth of TI hardware, software and textware available, as well as provide crucial feedback about new products.

The funny thing about all this is that user groups are needed now more then ever. Retail outlets carrying TI products have disappeared. As machines regularly change hands, there are more and more beginners desperate for information about new software and hardware, as well as about how to use the stuff they have. You'd think user groups would be booming - what with a potential total worldwide membership of 3 Million+.

User groups have been dying because more and more they've turned to examining their collective naval. I often hear from users that don't belong to user groups simply because they *aren't interested in helping new and beginning users.* Not just the cassette users but also new disk system owners. Its kind of an institutional death-wish. More advanced users move on to new, more powerful machines but no new members join because user groups don't care, or cater to them. User groups get smaller and smaller and more new owners put their machines in closets because they can't get information about how to use what they have. It is a continuing spiral straight to oblivion.

In future issues I'd like to examine this problem, and tell you about user groups that have actually been growing, and how they do it - including one group that is larger now then it ever was when TI supported the 4A. I'd like to hear comments from our readers about this.

If you would like to enquire re: this article, or to subscribe to Asgard news, you may contact Chris Bobbit c/o Asgard Publishing, P.O. Box 10697, Rockville, MD, 20850, USA.

Modem Users:

Don't forget that the Science Centre BBS has allocated room for the TI user. I recently logged-on and found that there had not been activity for some months. The BBS has RLE and GIF databases, as well a TI upload and download sections. The BBS can accomodate users at 300, 1200 or 2400 BPS rate (modems). Remember to use no parity! If you use a 2400 BPS modem, the Science Centre will give it a good workout. I recommend that users access the board at off hours, as it is usually fairly busy. There are news of interest re; activities at the centre, for all ages, including at-home type of scientific experiments, for budding scientists. To call the BBS dial: (416)429-1700, 24 hrs.

Report From Computer Fest:

As the 9T9 Users Group sold the quota a forty pre-show tickets, we were given the free use of a booth, at the Fest. Though I was working Friday, I did attend for the remaining two days. I would like to thank Randy for bringing the club's system, and Gary both for manning our booth for the entire three days. Also, thanks to Mark, for bringing his system and helping out at the table. Blair, also, was there for Saturday and Sunday. Thanks, too to Randy, Steve Findlay, Neil, Eric, Keith and Athena, for your help.

The show was physically about the same size as a year ago, when I last attended. Though the number of both clubs and vendors seemed fewer. There was an abundance of both high-end systems, as well as a number of portable and laptops represented. Prices were fairly similar, though a several "good" deals could be found, if you looked hard enough. Parts Galore was selling half-height, DS/DD, 5 1/4, disk drives for $100. These were new Panasonic silent-type drives. I bought one to replace a defective Toshiba drive, bought from Exeltronics over a year ago.

Blair and Gary, both scooped-up good buys on new Star NX1000 series printers. These units, though not having 24 pins like my NB24-10, had a number of advanced features not found in my Signature series printer. They included parallel connection on the right side of the printer, instead of the rear, (where it could interfere with the paper flow). Also, built-in, in addition to the NLQ, (Near Letter Quality), were about six additional fonts; a couple more than found with the NB series. The most interesting feature was a single-sheet mode, which allowed the user to, by merely moving a lever, cause the contineous paper to back out, and with an attachment which quickly snapped-in, allowed for the use of regular sheet paper. No need for elaborate DIP switch settings or involved attachments. Then, having finished with a single sheet mode, the user mere flips a lever to switch back to contineous paper mode, (no need to re-thread the contineous paper back into the printer -it's all automatically done).

Other features included with these printers, are front selection of draft and NLQ modes, and margin settings. The printers came with a bag of about $25.-worth of extra's, including two ribbons and 500 sheets of paper. The great appeal, to the TI user of a Star printer, is that like the old Gemini 10X, the new units are Epsom compatible, as therefore graphically compatible with any software written with the TI impact printer in mind. Also, these new series are much quieter and more compact than the NB, which was as large and noisey as the old 10X. Surprisingly, these units at the show, sold for about $70. less than what I paid for my origional printer, a Gemini 10X, back in 1984.

I saw a TI-99/4A, with cassette recorder, and some command modules, (remember that term?), and other software, being sold at the used merchandise table, for $150.; and later $125. I never knew whether the unit was sold of withdrawn for sale by the vendor.

I got a good deal on a used, lockable diskette box, along with dividers and ten diskettes for $5.

As to our club, we added a couple of names to our list, had a couple of renewals for 1989, and sold a number of disks of the month.

We cleared our inventory of back issues of the newsletter. While manning the table a number of interesting questions were poised, some of them asked of us more than once. I'll try to answer them here, as some of our membership may have the same questions in mind.

One person had a broken set of TI joysticks, and needed help. It seems Randy still has a few Wico adapters for the TI for sale. These are the 9 pin D adapters, which plug into the console's joystick port, or the joystick port on the Geneve. To the adapter can be inserted two Atari or Commodore style joysticks. Contact Randy for availabilty or price. Triton usually stocs these item, also.

Another question was about the possibility of plugging a parallel printer into the console. Databiotics has come up with a special version of their Mini Writer cartridge, which has a built-in parallel plug. Another comes with a Centronics style cable. I think Triton, also, sold this one.

Software questions, availability and prices were answered in our June/July issue of Newsletter 9T9. We had queries re; both the TI Pro computer, as well as the advanced TI calculators. To my knowledge, there is no active user group, in Canada, for either product. I would greatly appreciate it if a reader would correct me on this point. Or if there is a group for either product elsewhere, could you please drop us a line.

Just incase you didn't read the above paragraph

We had a couple of new memberships and couple of renewals for 1989 and sold a number of disks of the month. We met many TI users and kept busy answering all kinds of questions about the TI. Many users were impressed to see the Myarc Hard/Floppie Disk Controller, I brought, as well as Gary's Geneve. This, also, encouraged a few visitors to dust off their systems and consider upgrading it. The public exposure our club experienced, as well as a current interview in this month's Toronto Computes, will hopefully bring us some new members.

Mail Call:

I had some interesting replies and comments to my Hard Floppie Disk Controller Review, TId Bits 21, and "Downs of UPS" articles,from GEnie:

Item	8165787	88/10/01	10:59
From:	MARC-LEVINE	Marc C. Levine	
To:	S.MICKELSON	Steve Mickelson	
cc:	MARC-LEVINE	Marc C. Levine	

Sub: EMBARRASSED

Boy am I ambarrassed! I never associated the "Steve Mickelson" I was writing to with the the "S.MICKELSON" here on Genie. First of all I would have used E-Mail rather than the US and Canadian postal services. How come you have never brought up the subject of the Adam dimps here? Barry has also expressed an interest in it. You should start a topic about them. You should upload the jist of the reply your gave me in the newsletter to the Genie message base. *Any* new info on the Z-80 coprocessor for th Xbox. Especially cost. Considering that we just bought a Sega (I stayed away from Nintendo because thought they could possibly be dumped) for 89 I figure a coprocessor shouldn't be too much.

Heck, the Sega can with sticks, gun abd cart. I also found out that it also uses a Z-80. You see, I didn't understand that this was all based on the Z-80. I though that possibly the Nintendo used a 9918. oh well.

I hope you or someone from your group makes it to the Chicago faire. It would be very interesting to see the Z80 emulator (software), Adam dumps and Emulator board for the Xbox.

Since the Sega also uses the Z-80 I could suggest a non-TI hardware project. How about an adaptor to allow the playing of Nintendo carts in a Sega or Sega in a Nintendo. You could become independently wealthy <grin>.

Oh, by the way, I'm very impressed with the 9t9 Newsletter. Need to consider subscribing. (I think my wife would shoot me right now if I subscribed to another TI publication.) Your group should also sell subscriptions at the Faire. (I could easily get one there, my wife has always resigned herself to the fact that I will spend 100-200 at the faire. I always have. I think she looks at it as being as certain as death and taxes <grin>)

=END=

Item 4432327 88/09/29 16:22

From: GENIAL.AL Barry A. Traver, TI RT

To: S.MICKELSON Steve Mickelson

cc: TI$ TI RT Sysops

Sub: POSTSCRIPT

Steve,

I didn't notice earlier that file 2620 is a 7-bit ASCII upload of a file intended for use with the TI-Writer formatter. Since GEnie strips out the carriage returns, etc., this will not work, of course.

Since the contents of the file should be of interest to people anyway, I have left the file up, but have added a comment letting people know that it cannot be used with the formatter in spite of appearances.

I didn't realize that UPS was so bad in Canada. They don't always live up to their reputation in the States, either. One time UPS left a box full of (non-blank!) disks outside in the sun for me (it's a fortunate thing I wasn't away for the week!); another time UPS left my repaired 9640 between the outside doors. (I'm fortunate that neither was stolen or harmed!)

Your friend,
Barry

P.S. Keep those good uploads coming! It does take time to "learn the ropes" on any system, but we'll do our best to help out any way we can.

=END=

Request:

Finally, I would like to put out an open request to our readership for any information on the availability of a cribbage game for the TI. There are several poker, black jack and solitare games for our computer, but I've not been able to find one. Please contact me if you know of a TI cribbage game.

For those who like to type-in programs we have scattered throughout this newsletter some short programs. This month's meeting will include a demo of Disk U, more on Myarc's HFDC and a demo of how to transfer both ASCII and program files between the TI and the NEC PC-8500, an orphaned Z-80 based computer, using RS-232 ports. That's it for this issue of TId Bits.

"You'd better re-program that remote control. It turned everything on at once and tripped all the circuit breakers."

"It always smokes after interfacing."

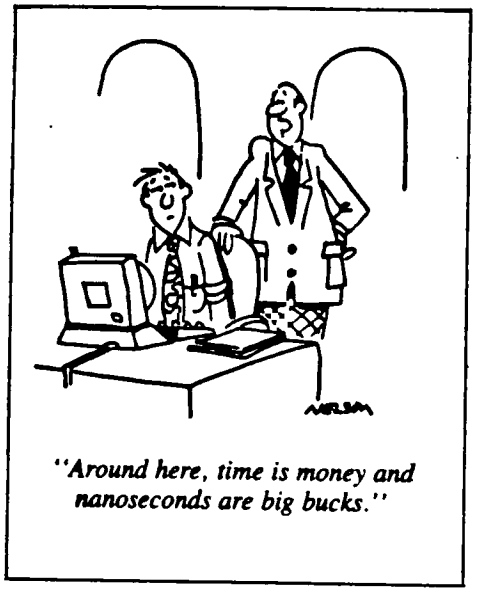

"Around here, time is money and nanoseconds are big bucks."

NINE T NINE USERS GROUP STATEMENT OF ACCOUNTS 1988 rev. 06/26/88

Open Bal.	1044.04	B7 exec	Bank Balance	1194.39	at 26/06/88
Total Inc	1677.63		Cash on Hand	7.46	
Total exp	1379.82		Accounts rec.	140.00	adv SM
			Accounts pay.	0.00	
BALANCE	$1341.85		TOTAL	$1341.85	
			DIFFERENCE	0.00	

EXPENSES Total to Date $1379.82

	newsletter, printing and paper	postage and supplies	equipment	library and software	miscellaneous
SUBTOT.	428.14	374.37	75.37	322.26	179.68

INCOME Total to Date $1677.63

	memberships		advertising	library	miscellaneous
SUBTOT.	1185.00		0.00	487.00	5.63

Misc. expenses includes: Mailbox rental $43
Mtg. Hall Rental $80 TREASURER Peter Sandford

While I a proud to say that I was one of those "less than 10" users who had contributed to Paul's GIF utility, at time this notice was posted, I am surprised at the apathy by users for this software. They apparently thought the Geneve was better way to go than a clone, and yet they don't support the relatively few software authors for the 9640.-Editor. From Compuserve....

THE 9640 COMMUNITY OUGHTA BE ASHAMED!

28-Mar/88

There are almost 1500 Geneve's in the hands of owners now, and one of the most popular things about these machines is their graphics capability. CLOSE TO 60% OF GENEVE OWNERS HAVE PURCHASED THE MY-ART DRAWING PROGRAM!

What is the most popular graphics application besides MY-ART - undoubtably it is Paul Charlton's GIF TRANSLATOR for the Geneve. Hundreds of people with Geneves regularly decode GIF pictures from Compuserve, GEnie and the hundreds of local BBS's - of every computer. GIF pictures are regularly used in 9640 demos, by Myarc at their demos, and to the personal enjoyement of hundreds of 9640 users.

So, how many contributions has Paul received to date for undoubtably one of the most popular 9640-only applications? Less then 10.

If that is the way 9640 owners plan to support software authors - I don't think the Geneve deserves to survive, and it certainly doesn't deserve 3rd party support!

If you use the GIF decoder - PAY FOR IT! Otherwise, I'm sure the creator of much of what is the Geneve will go elsewhere.

- This notice is uploaded by an outraged Chris Bobbitt without the approval or consent of Paul Charlton.

P.S. In my conversation with Paul he mentioned that the GIF DECODER had one feature all of us missed. It has the ability to read a script file of *commands* created with a text editor so you have a crude sort of slide- show function with the thing. To use it, when executing the program type GIF Script_Name and the text file SCRIPT_NAME will automatically be executed.

Submissions For October's Newsletter

-BY RANDY ROSSETTO

-1- If you read this and haven't seen our club booth at COMPUTER FEST '88 I guess you missed it! The 9T9 USER GROUP had a booth at the computer show October 14, 15 16, at the Arts, Crafts and Hobbies Building at the C.N.E. grounds and hopefully this newsletter will be printed in time to distribute at the show, how about it Steve!!(EDITOR'S NOTE: To Randy et al;
NOT ENOUGH TIME!! I was not able to find, in the two weeks between the last meeting and the Computer Fest, the 16 to 20 hours of free time needed to put a an early issue of Newsletter 9T9, for a middle of October deadline. -SM!)

-2-TI-BASE Ver 1.01 is now available and INSCEBOT, INC has donated the UG a copy to demonstrate, which I attempted to do at the last meeting. TI-BASE has recently been reviewed and the articles appear in the Aug. and Sept./88 issues of the Houston Users Group newsletters. Needless to say that it is stuctured like the Ms-dos DBASE programme with DOT(.) Commands and Directives. Since up to 5 databases can be active at one time in their Slots TI-BASE is a relational database which can interchange and manipulate data between the Slots. This is done by writing a small Batch File type programme, a Command File, with the built in Editor or any other DV80 text editor. You .Do and .Use Filename to operate your database. Help functions are invoked by Fntn-7 and a Tutor disk comes the package as well as a function key overlay. 32K and a single disk drive are the minimum hardware requirements.
TI-BASE limitations are:
255 Charaters per Field
17 Fields per Reccord
8192 Records per DataBase (Ver 1.01)
TI-BASE was written by Dennis Faherty and is available through the User Group at a discounted price of $19.95 US plus $1.50 US postage and handling (regularly $24.95 US).

-3- The next big show this fall is the 6th annual TI FAIRE Convention put on by the CHICAGO TI USERS GROUP. The schedule will include a Social Mixer, Friday, Nov. 11, 8:00-12:00 p.m., price $4.00, Exhibits and Seminars at the Holiday Inn, 3505 Algonquin Road (Route 62), Rolling Meadows, Illinios, Saturday, Nov. 12, 1988, 9:00 a.m. to 6:00 p.m., Admission $4.00 followed by a dinner Sat. Nov. 12, 7:00-9:30 p.m., price $10.00.

A number of other events are included such as CHILDREN'S NIGHT OUT with the hotel staff, Friday PM, pay at event. The Holiday Inn has a special on a double (family) room rate of $55.00, call (312) 259-5000 for reservations. Limo service is free to and from O'Hare airport and hotel. I have been to the TI-Faire/Convention twice and it is a good show. Further information on the faire and tickets can be purchased in advance by contacting:Marcy Brun, Faire Manager
Chicago TI User's Group
P.O. Box 578341
Chicago, Il 60657
or call the Faire Hotline (312) 695-9291. This faire is held in conjunction with the MILWAUKEE TI-FAIRE on Sunday, November 13, 1988, 9:00 am - 5:00 pm at the Quality Inn, 5311 S. Howell Ave., Milwaukee, Wisc. (across from Mirchell Field Airport). This is produced by the:Milwaukee Area 99/4A User's Group
Mr. Gene Hitz (414) 535-0133
4122 N. Glenway
Wauwatosa, Wisc. 53222
and:The Wisconsin 99er Computer Council
P.O. Box 2723
Appleton, Wisc. 54911

-4-During the summer of '88 we received from the ever gracious Jim Peterson of TIGERCUB SOFTWARE, 156 Collingwood Ave., Columbus, Ohio 43213, a diskette with his latest software catalog No. 8 as well as his latest Tips from the Tigercub, numbers 46-54.
Jims programming tips and examples are highly recommended for those who wish to get the most from their XBasic programming.

-5-NEW MEETING P L A C E AND T I M E.
Canada Remote Systems as noted in last months newsletter has a space available for computer groups so through my enquiries have arranged for the next meeting to be held at this facility. The details are as follows:
PLACE:CRS CANADA REMOTE SYSTEMS
4198 DUNDAS STREET WEST
TORONTO, ONTARIO

DATE: OCTOBER 27, 1988 THURSDAY

TIME: 7:30-10:30 PM

NOTE THAT WE ARE RETURNING TO THE MID- WEEK SCHEDULE SO THAT WEEKENDS CAN BE FOR FAMILY AND WE KNOW THAT EVERYONE CANNOT BE SATISFACTORILY ACCOMMODATED BY THIS CHANGE OF SCHEDULE.

-6- Since we are approaching the 5th anniversary of the orphaning of the Texas Instruments TI-99/4A Home Computer on October 31st, 1988, it is important to document and keep at hand certain historical data that can serve as a reference for the many old and new users of the Home Computer.

The reference I would like to remind the TI-99/4A Users Groups of is the "99er DIRECTORY" of "Commercially Available Software, Peripherals and Accessories","Summer/Fall 1983 Edition" along with its one page addendum published by the long gone now defunct "99'er HOME COMPUTER MAGAZINE".

As a quick review of what was in this Directory, there are 10 sections of SOFTWARE listed:
-Home Management/Personal Enrichment
-Business-Professional
-Early Education
-Continuing Education/Personal Enrichment
-Teaching and Administrative Aids
-Entertainment
-Music
-Word Processing
-Programming Aids
-Other
Approximately 1100 listings total are cataloged.

"Everytime they simplify the software they complicate my life."

And there are 8 sections on PERIPHERALS and ACCESSORIES listed:
-Monitors
-Printers
-Storage Devices (cassette recorders, disk drives, etc.)
-Interfaces
-Joysticks, Keypads and Controllers
-Storage Media (diskettes, cassettes, etc.)
-Accessories
-Other
Approximately 150 listings are cataloged.

All the above listings are referenced to an Alphabetical List of Manufacturers (over 150 listed) who were in the TI-99/4A Hardware/Software business 5 years ago. Check this list and see how many are still around! Check the prices and compare these to those of today's, check some of the software available (you may remember some of the titles, you know, the ones in the disk case at the back of the cupboard!), take them out and show them to a new user, after all whats a TI-99/4A Home Computer without its ROOTS!

-7- A PROSPEROUS THANKSGIVING (OCT. 10th) to our Canadian friends AND A PLEASANT COLUMBUS DAY to our AMERICAN friends (is it true that when Columbus discovered America the first landfall was OHIO!!??

-8-9-10-I'm out!

SUPPORT TRYWARE/FAIRWARE

By Cecil G. Chin, Officer at Large

For those of you who have not yet contributed to ARCHIVER 2*4; you can still do so by contacting Gary Bowser or myself with your contrubitions as early as possible; as the money order will be purchased soon.

The next Program on our list is DISK UTILITIES better known as DSKU. This program is written by John Birdwell in Assembly language. It is a Disk Manager and Sector Editor which is very user friendy. It has so many features I will not be able to list them all; but to name a few: apart from the norm, it has Disk and File Compare, View File (screen or printer), Print Sector, Input and/or read Comments. There is also a Hex-Dec/Dec-Hex converter.

The author is asking US$15 so, CAN$15 plus 20% for exchange and other expences should cover it.

The necessary form for the contribution will be available at the next meeting. If you cannot make the meeting please contact Gary Bowser (960-0925) or myself (671-2052) and arrange for a delivery or pickup.

HARDCOPY

-BY STEVE FINDLAY

I sometimes find it difficult to get started on this column and so procrastination is no stranger. I missed last month's column because no deadline was assigned. The next thing I know, the newsletter had already been prepared. This rambling is my way of apologizing for the absence of HARDCOPY in the last issue of the newsletter.

This issue I would like to thank Eric Wikland once again for another donation to the HARDCOPY library. A number of past copies of the Chicago users group newsletter as well as two years worth of Micropendium (1986-1987) has now been gratefully accepted into the library. Also, Neil Allen has donated the instruction manuals to the Video Chess and Parsec cartridges. Thanks Neil! (sarcasm intented) I now have to figure out a way to store them for easy filing in the library cabinet and ease of borrowing. Oh well, the challenges of the job is the joy of the job?

Since Neil has started the ball rolling, I have added the manuals for the Adventure, Terminal Emulator II, Tombstone City, Car Wars, TI Invaders, Indoor Soccer and Burgertime cartridges. Also, there are manuals for the TI program recorder (cassette) and Teach Yourself BASIC.

Due to the amount of newsletters coming into the library I have had to shuffle around a few of the newsletters in the binders. I have tried to keep as much as possible in their original binders but not all would fit. Please consult the library index that is present at every meeting for the club newsletters you are looking for.

Now...on with the show!!!

BINDER #4

This binder contains the newsletters from five different Canadian TI User Groups. These groups include the Saskatoon TI Computer Club (STICC), Victoria 99'ers, (British Columbia), Winnipeg Computer Club, Nova Scotia TI (TINS) and the Calgary 99'ers.

The following is a list of, what I thought might be, interesting articles, programs and miscellaneous "Tid-bits".

* joystick pinouts for TI conversions (STICC: Aug 84 and Mar 87)
* an article on common words used in adventure games (STICC: May 85)
* an article on setting the TI Writer formatter to print in condensed mode (STICC: June 86)
* a modification to install the speech synthesizer in the console (STICC: Oct and Nov 86)
* an article on converting Graphx fonts to TI Artist fonts (STICC: Mar 87)
* an article on setting up a burglar alarm system with just a console and a TI BASIC program (Victoria 99ers)
* a short discussion of the built in "REVIEW MODULE LIBRARY" cartridge menu selection in the console GROM. (Victoria 99ers)
* a number of Forth tutorials and Forth system disk corrections (Victoria 99ers)

* TI Runner screen editor written in BASIC (WINNIPEG: May 85)
NOTE: I have rewritten this program and added a few bells and whistles, so watch for the program listing in an upcoming issue of this newsletter.
* a Forth program listing to decompile Forth words (WINNIPEG: June 85)
* sound routines in assembly tutorial (WINNIPEG: Feb 87)
* a comparison of programming languages to automobiles (WINNIPEG: Feb 87)
NOTE: not as strange as it sounds!
* a BASIC listing for a music synthesizer (TINS: Sept 85)

Since the Calgary newsletters only number a grand total of three, I was not able to find an article that caught my eye... perhaps in issues to come.

BINDER #5

In this binder there are newsletters from three more Canadian user groups. These include the 99/4A Users Of Canada (a short lived effort by Bob Boone to establish a group for all Canadian user groups), the Ottawa Users Group and 99er Online (the Edmonton 99er Computer Users Society).

The following is the highlights of these newsletters.

* a list of words that could be used by BASIC programmers to spell words phonetically so that the speech synthesizer pronounces them correctly. (99/4A Users Of Canada: Dec 84)
* a BASIC listing of a music writer program (99/4A Users of Canada: Dec 84)
* a Forth screen dump program listing (99er Online: Nov 85)
* a TI BASIC listing for a disk labeler (99er Online: Nov 85)
* a two part article and listing for improving the Forth editor (99er Online: Dec 85 and Jan 86)
* what looks like an excellent beginners tutorial on c99 by Michal Jaegermann (99er Online: Mar and Apr 87)
* a c99 program listing for a game called Robot Rampage (99er Online: Apr 87)
* a GPLLNK tutorial by R. A. Green. R. A. Green is the author of the Macro Assembler (Ottawa: Sept and Oct 85)
* copies of the function key strip for a number of different programs (Ottawa: Oct 85)
* a column on TI Multiplan Tips and Techniques (Ottawa: Jan and Feb 87)
* an on going column called Writer-Wroutes which contain tips on using TI Writer (Ottawa)
* a modification for adding a second cassette port to the beige consoles (Ottawa: Feb 87)
* a very good review of the program "THE PRINTER'S APPRENTICE" which is presented in the style that the program is capable of producing. It certainly seems like a good desktop publishing package (Ottawa: Jan 88)
* an Extended BASIC listing for an English/French calendar program (Ottawa: Sept 88)

The Ottawa Users Group newsletter is one of the finest publications in the TI user group community. Unfortunately, the library does not have a unbroken series of them. I personally subscribed to the newsletter for two years and if I can find someone to photocopy the issues that are missing from the library, then the seven part series by Lutz Winkler on Forth would be available as well as other continuing columns on TI Writer and Multiplan. Please speak up if you can be of help.

And now a blast from the past...the following BBS message was written by Stu Olson, the author of Mass Transfer and the MXT BBS software. I feel that his statement reflects what is happening in the TI fairware world.

Message 3327
Subject: CRU ABOVE 1000
To: STU OLSON
From: GARY SWEERS 174
Date: 06/11/87
*-

Stu, sorry to hear that you will not consider looking at the CRU problem with your MT. Sure seems a shame to have such a fine program and for lack of what sounds to me like a minor software change, be absolutely the finest, most universally user friendly, and COMPATIBLE term prog. going. I for one sure wish you would reconsider and at least be open minded to taking a look at what would make it work with ramcards at CRU above 1000.
P.S. I heard the Corcomp ramdisk also has the capability of changing the CRU the card is at.
Gary

Message 3328
Subject: open minded
To: Gary S.
From: Stu Olson (Sysop) 1
Date: 06/11/87
*-

Gary...I don't think I have a problem being open minded. I am really just plain tired of programming. First off, I sold my main system. The only TI I have is that which the BBS runs from. Writing or editing terminal software on a single machine makes testing the changes very difficult. Over the past two years, while constantly updating M/T, I ran 3 full systems. 2 of those provided me with immediate testing of any software change via a cable RS232 connection between those two systems. Without a doubt, M/T could be rewritten to support disk cataloging above >1000, and also file transfers. However, the disk drive is available for transfers. Can't it be used?
I've learned a lot over the two years I have been working on M/T. Many people have been very supportive. Many more have been extremely rude. I have actually received letters from users who obviously don't know the first thing about their TI, modem, or programming. Those typical letters come off with statements such as:

" I would consider paying you $10 if you would include on line text to speech my TEII module has."
I don't know if you have ever heard of a IBM type faireware program called Procomm or not, but it is a very impressive TE program for those type of machines....anyway, I had one user tell me that he would like the features offered in Procomm incorporated into M.T. Well, did you know that the Procomm file set only takes over 275K bytes of ram? This guy actually told me I should write a script routine that would dial, logon, read messages, and download any new files, then logoff the bbs, anytime of the day, unattended. (yes, Procomm can do that, but it lives in a 640K machine also).......CONT.

Message 3329
Subject: continued
To:
From: Stu Olson (Sysop) 1
Date: 06/11/87
*_

Virtually every letter has a comment of some type in it. Some of them are quite complementary, many of them just about what M/T can not do. What erks me worse is that the people DO NOT READ the docs. About 40% of the "I wish M/T had" features are already in it...they are just too lazy to open the docs and read up on what is available.

In my opinion, releasing Ymodem was maybe the biggest mistake I incorporated into M.T. I have received a lot of "why did or didn't you do it this way" comments. Gee....until I wrote it, most of the TI community did not even know another protocol existed besides Xmodem and TEII. I thought it would be fairly well accepted. Now, I get about 20 complaints every couple of weeks about not being able to use Ymodem on a BBS. Gee, doesn't anyone ever do file transfers to other people any longer, or is it that they can only communicate to a BBS file?

Maybe I expected too much from the TI population overall. This much I can say, I have been lied to more times than I can count, and from people I have known for several years...."I am going to send you $10 this weekend....the check is in the mail"...kind of stuff. I can even name users you know personally that have promised and never came through at all.
I did not write M.T. so I could be rich and famous. I originally wrote it because I wanted to be able to autodial my long gone 300 baud smart modem. The first version terminal version never even had a file transfer in it. (in fact, Xmodem was not yet known to the TI computer at that time)....cont.

Message 3330
Subject: cont.
To:
From: Stu Olson (Sysop) 1
Date: 06/11/87
*_

Getting back to users.....I have had the "guilt trip" ones lay the big one on me about...."well, if you really don't care about any of us, go ahead and be that way...but if you really are a human being, then why don't you ....." and off it goes with another suggestion.

Well, I have pretty much said my piece. I have stood behind M/T for over two years now...doing update after update. I never ONCE requested a single dollar from anyone. Everyone knows it is fairware software. What gets tiring is when users send you a letter, requesting the program for "evaluation" testing. Funny thing, they do not include a disk, mailer, postage, or any money to cover any of those expenses. Tell me, why do I have to pay money to give my program away? If I don't respond, then I am the "jerk" who can't seem to "take care" of the users who support him. Hey folks, I am not dependent on anyone, except maybe those in my own family. I have had dozens of users who have expected me to call them long distance voice so I could explain to them something that they were too lazy to read in the docs. Hey.... Ma Bell doesn't give me FREE phone bills because I write software!

You see Gary...everything has piled up over the past 2 years, and I am simply tired of it. I am tired of the abuse, the phone calls, complaint letters, etc. I am GRATEFUL to those users who were considerate enough to realize how much of my time (away from my family) was put into this software. Would you beleive my wife and I have had serious fights many times over on the amount of time I spend when I was into a new update on M/T? .....cont

Message 3331
Subject: cont.
To:
From: Stu Olson (Sysop) 1
Date: 06/11/87
*_*_*_*_*_*_*_*_*_*_*_*_*_**_*

There are not enough $10 checks out there that is worth my marriage. Don't get me wrong...my wife is very understanding, but when one neglects one's spouse for

weeks at a time, something has to give.

Version 4.2 was stretched over a much longer period of time than was needed. However, my marriage is going along just fine also. Now that I have sold my programming system, I will not have to worry about it any longer.

It is not that I do not care about the TI user population, for if I did not, I would not be the V.P. of the user group here in Pheonix. (remember, the job pays $0.00) At times though, the users do forget what it is like to be the programmer. I know what it is like, and I lived with it for over two years now. All I really wish to do is just play with computers for now, not program for other people. I have found that doing that yields much more headaches than it does satisfaction.

In closing...this message is not aimed at you. It is info for all the users who have been wondering why Stu doesn't seem to care anymore about M.T. Well, it is now out in the open...everyone knows why I am a retired programmer. As I said in my 4.2 update docs...it is time for a new programmer to try his/her hand at this trade, and just maybe, they will have better luck than I did.

In my own words..."It has been real, and it has been nice, but it has not necessarily been really nice."

catch you later.....Stu

'TIL NEXT MONTH... CALL LOAD(-31962,32)

BREVITY CODE ANNOUNCED

In its continuing effort to reduce operating costs without sacrificing quality, the Value Management committee has released its new set of standards for the printed word from the Editor.

Effective immediately the following standards will apply to all written or printed communications.

a. Unpronouncd vowls will no longr be usd. This applis to technicle litrtr as well as corrspondnc.

b. Vowls usd to chang the sound of the preceding consonant will also be droppd. Appropriat sounding consonants will be sugstituted. Thus "corrspondnc" becoms "corrspondns", "devic" becoms "devis", ets.

c. The sam rul will apply to unprononsd consonants. Finally we can writ "numatic" as we shud hav be doing for yers.

d. Dubl letrs ar a totl wast wen on wil do. Think of how this wil shortn a bokeprs job title.

e. Wy shud it tak to letrs to mak a sound? Hensforth "sh" wil be repasd by a capital S wen it apers in the midle oa a wrd; likwiz a T wil replas "th" and C wil replas "ch".

The Valu Manajmnt comite is prowd of thez new ruls and welcom yur frT sugestns. We hop yu wlcom this Cang and be prwd of Te progres we ar making at Te Clb.

```
1 !***DISK LABEL II*** A TINYGRAM BY ED MACHONIS, QB-99ERS, BAYSIDE, NY
2 OPEN #1:"PIO"
3 DISPLAY AT(3,1)ERASE ALL:"DISK NAME?":D$ :: ACCEPT AT(4,1)SIZE(-17):D$ :: DISP
LAY AT(7,1):"Continued?":C$ :: ACCEPT AT(8,1)SIZE(-17):C$
4 DISPLAY AT(11,1):"TYPE?":T$ :: ACCEPT AT(12,1)SIZE(-28):T$ :: DISPLAY AT(15,1)
:"REMARKS?":R$ :: ACCEPT AT(16,1)SIZE(-28):R$ :: E$=CHR$(27)
5 DISPLAY AT(19,1):"YOUR NAME?":N$ :: ACCEPT AT(20,1)SIZE(-28):N$ :: INPUT "HOW
MANY COPIES?":Q :: FOR J=1 TO Q
6 PRINT #1:E$&"E";E$&"G";E$&"-1";E$&"W1";TAB((18-LEN(D$))/2);D$;TAB(18);"";TAB((
18-LEN(C$))/2);C$;TAB(18);"";E$&"F";CHR$(15);TAB(2);T$;
7 PRINT #1:TAB(30);"";TAB(2);R$;TAB(30);"";E$&"-0";E$&"4";TAB((30-LEN(N$))/2);N$
;E$&"5" :: NEXT J :: GOTO 3
```

TRICK OR TREAT

```
1 REM ****************
2 REM *  HALLOWEEN   *            *   CLASSIC    *
3 REM * MICROpendium *
4 REM *   OCT, 1985   *
5 REM * VOL.3 NUM.10 *
6 REM *    EX-BASIC   *
7 REM * by J.LATIMER *
8 REM ****************
9 REM
10 DIM A$(5),M(32,2),N(32):: FR=760 :: F=1
20 RANDOMIZE :: CALL CLEAR :: CALL SCREEN(2)
30 FOR I=1 TO 32 :: READ M(I,1),M(I,2):: NEXT I
40 FOR I=1 TO 32 :: READ N(I):: NEXT I
50 FOR I=1 TO 5 :: READ A$(I):: NEXT I
60 FOR I=1 TO 13 :: READ CH,CI
70 CALL CHAR(CH,A$(CI)):: NEXT I
80 CALL COLOR(2,2,10)
90 FOR CS=8 TO 14 :: READ FG,BG
100 CALL COLOR(CS,FG,BG):: NEXT CS
110 FOR J=1 TO 47 :: READ A,B
120 CALL HCHAR(A,B,104):: NEXT J
130 CALL COLOR(10,2,2)
140 FOR I=3 TO 11
150 CALL HCHAR(I,19-I,112,2*I-5):: NEXT I
160 FOR I=1 TO 16 :: READ A,B,K,CH,REP
170 FOR J=A TO B :: CALL HCHAR(J,K,CH,REP)
180 NEXT J :: NEXT I :: CALL HCHAR(21,18,46)
190 CALL MAGNIFY(2)
200 FOR X=1 TO RND*10+20
210 K0=INT(RND*2)+1 :: IF K0=2 THEN K0=16
220 CALL SOUND(500,-(INT(RND*3)+5),0)
230 CALL COLOR(13,K0,1):: CALL COLOR(10,K0,1)
240 CALL COLOR(#(INT(RND*4)+2),INT(RND*12)+3)
250 NEXT X
260 FOR SP=2 TO 5 :: CALL COLOR(#SP,2):: NEXT SP
270 CALL COLOR(13,2,1):: CALL COLOR(10,2,1)
280 CALL SPRITE(#1,96,16,1,256,0,-10)
290 CALL SOUND(100,FR-S*15,10,FR-2,10,FR+3,10)
300 CALL POSITION(#1,S,T)
310 IF T<65 AND F THEN CALL MOTION(#1,4,0):: F=0
320 IF S<23 THEN FR=FR-3 :: GOTO 290
330 CALL DELSPRITE(#1):: FR=760 :: F=1
340 CALL SPRITE(#6,128,16,142,117):: I=1
350 CALL SOUND(300,N(I),5,N(I)*2,8)
360 CALL SPRITE(#2,97,16,100-M(I,1),80-M(I,2),#3,98,16,100-M(I,1),153-M(I,2))
370 CALL SPRITE(#4,99,16,148-M(I,1),70-M(I,2),#5,100,16,148-M(I,1),166-M(I,2))
380 IF RND>0.2 THEN CALL COLOR(#6,2):: GOTO 400
390 CALL COLOR(#6,16)
400 I=I+1+32*(I=32)
410 CALL KEY(0,X,S):: IF S=0 THEN 350 ELSE 200
1000 DATA 0,-4,0,4,0,-4,0,4,0,2,0,2,0,-2,0,-2
1010 DATA -4,0,4,0,-4,0,4,0,2,0,2,0,-2,0,-2,0
1020 DATA 4,4,-4,-4,-4,-4,4,4,4,4,4,4,-4,-4,-4,-4
1030 DATA -4,4,4,-4,4,-4,-4,4,-4,4,-4,4,4,-4,-4,4
2000 DATA 131,147,156,156,147,147,131,131
2010 DATA 131,147,156,196,147,156,131,131
2020 DATA 156,175,196,196,196,208,196,175
2030 DATA 147,156,175,175,175,196,175,156
3000 DATA "183C5AFFFFFFFFA5","183C5AFFFFFFFF5A"
3010 DATA "FF00FF00FF00FF00","0000004200000000"
3020 DATA "FFFFFFFFFFFFFFFF"
4000 DATA 88,5,96,1,97,1,98,1,99,2,100,2,104,5
4010 DATA 112,5,120,5,128,4,129,5,130,5,136,3
4020 DATA 3,3,16,1,16,1,7,7,10,10,2,2,13,1
4030 DATA 1,1,1,6,1,7,1,26,1,31,2,3,2,5,2,8
4040 DATA 2,24,2,25,2,30,3,2,3,4,3,9,3,10
4050 DATA 3,23,3,29,4,2,4,5,4,20,4,21,4,22
4060 DATA 4,24,4,28,4,30,5,1,5,5,5,25,5,27
4070 DATA 5,31,6,4,6,25,6,27,6,31,7,3,7,24
4080 DATA 7,26,7,32,8,2,8,4,8,23,8,27,9,1
4090 DATA 9,5,9,28,10,6,10,29,16,24,1,88,32
4100 DATA 12,24,7,112,19,18,24,14,120,5
4110 DATA 12,15,9,136,6,12,15,18,136,6
4120 DATA 18,21,8,136,5,18,21,20,136,5
4130 DATA 12,15,10,130,4,12,15,19,130,4
4140 DATA 18,21,9,130,3,18,21,21,130,3
4150 DATA 19,19,15,130,3,6,6,7,120,5,7,8
4160 DATA 8,120,3,9,9,8,120,2,10,10,8,120,1
4170 DATA 19.19.16.128.1
```

"There's your trouble. You're going to laugh when you see all the mistakes you made assembling that unit."

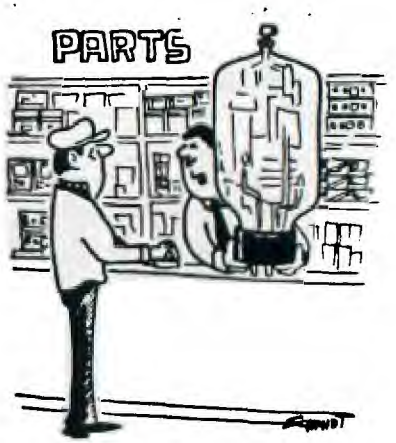

This has to be what you ordered. But—our Computer doesn't make mistakes. . .

Scoops from the Groups

In this section, Murrary Soupcoff tries to bring you up-to-date on what's happening with the major computer club/user groups around Toronto. We don't have enough space to cover every major user group each issue, but we hope to cumulatively cover the groups by focusing on different clubs each month.

We try our best to ensure the information is accurate, however meeting times and events may change on short notice. It is, therefore, a good idea to check with the appropriate club. Phone numbers for the clubs are available in the club listings.

Software drought may be over for GEME users

9T9 Users Group President Steve Mickelson hopes to demonstrate Myarc's innovative hard/floppy disk controller (HFDC) card at the club's October meeting.

According to Mickelson, the HFDC card can be used by both the TI-99/4A and Geneve computers. Retailing for around $325 U.S., Myarc's card can control up to four floppy disks (including 1.4 mg 3.5" floppies), up to 3+134 megabyte hard drives and one streamer tape back-up unit.

The complete HFDC package also includes Myarc Disk Manager 5 and an operating-system update for Geneve users.

Mickelson also is anticipating GEME's release this month. The long-awaited package will provide Geneve users with a windowing, mouse-driven, multi-tasking environment. Users will have access to up to four windows in which they can load and run four separate programs and then jump between them with a click of the mouse.

If it lives up to expectations, GEME could out-Macintosh the Macintosh. Geneve users may find their software drought at an end if they say "Gimmee" to GEME.

M

This mo
be flocki
'88 at E
25 and 2
special s

Spons
will allo
dealers t
newest h
fitors Ap
Tate an
expecte
ers like
Radius s

A ne
where b
Macinto
to repea
prizes.
softwar
sonal m

In The Bleachers

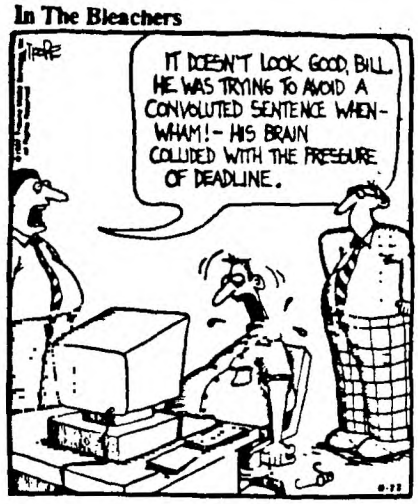

Career-ending injuries for sports writers.....

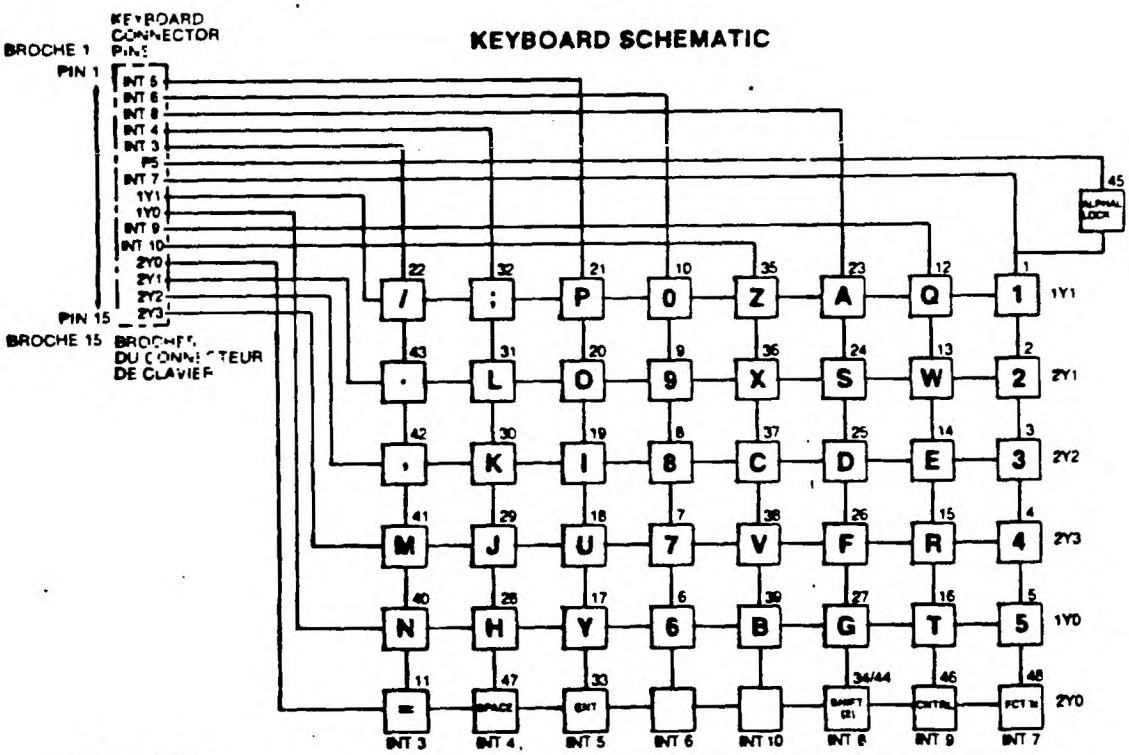

What A Guy

TI-WRITER TIPS (sources indicated)

-1- To jump directly to the first or last line of a TI-Writer file use FCTN 9 and S(earch) and 1 for the first line or E for the last line. From Tips from the TIGERCUB #51, Jim Peterson.

-2- Did you know you can type anything you want after a carriage return ON THE SAME LINE and it won't print out. But it will SAVE. This is great for text notes for screen reading. Very handy.

-3- Also handy is the Space use in LF and SF. When you LF and there is already a DSK2.MYPROGRAM up there on auto and you want to load DSK2.KONG, all you have to do is type the KONG and press the Spacebar and Enter, even though it will say DSK2.KONG GRAM on the screen. Actually, you can even SAVE a file with a long (up to 80-col) note after a filename and Space. This will disk Save and screen read but will not print out.

-4- Another handy-dandy is letter saving. If you write alot of letters let FUNNELWEB do the sorting and hard work for you. Just name the letter by date and name in the following way. If I write to Randy Rossetto on September 9 I would SAVE the file as DSK2.99RANDYROS. Always month first (9) followed by day (9) and the name as far as it will go. So if I wrote to Randy on June 29 it would be 529RANDYRO, but if I wrote on April Fool's Day it would be 41RANDYROS. This is handy if you write alot of letters on the same day, as TI-Writer will sort them for cataloging first by number then by letter. Therfore they will be numerically AND alphabetically sorted in the catalog.

The last 3 TIps from "Spirit of 99" The Official Newsletter of the Central Ohio NINETY-NINERS Inc., Sept. 88, IMPACT-99 article by Jack Sughrue.

FUNNELWEB 4.0 MENU FLOW CHART

FCTN-7 (AID) from any of these menus gives a disk directory.

1 TI Writer	A . . .
2 Edit/Assm	B . . .
3 XB Return	C . . .
4 . . .	D . . .
5 Myarc DM	E . . .
6 TI-FORTH	F . . .
7 . . .	G . . .
8 . . .	H . . .
9 . . .	I CONFIGURE

Extended BASIC first menu.
USER LIST. Boots from DSK1LOAD.
Items 4-L can be customized with CONFIG to load any XBASIC PROGRAM image, or D/F 80 software.

Exiting CONFIG returns to E/A menu.

1 EDITOR (Runs ED,EE)
2 FORMATTER (Runs FO,FP)
3 DM1000 (Runs MG,MH)
4 MODEM (Runs User's MD)
5 DATABASE (file UTIL1)
6 UTILITY (Customize w/CONFIG
7 USER LIST (Needs file UL)

TI Writer CENTRAL MENU. Boots directly after loading file UTIL1

<—SPACE BAR—>

1 EDITOR (Runs ED,EE)
2 ASSEMBLER (Runs AS,AT)
3 LOADERS
4 c-COMPILER
5 DISK PATCH
6 UTILITY (Customized with CONFIG;boots any Assm file
7 RESET/QUIT

E/A CENTRAL MENU. Alternates with TI-W by pressing a non-num. key.

1 . . .
2 . . .
3 . . .
4 . . .
5 MYARC DM
6 NEXT UL (Runs UM, a recustomized dupe of UL)
7 CASSETTE (Loads E/A PROGRAM from CS1)
8 CARTRIDGE ROM

User List CENTRAL MENU. Loads from #7 of TI Writer Central Menu. Items 1-8 can be customized with CONFIG to boot any program image of

1 TEXT MODE (Loads PROGRAM files normally loaded from TI Writer #3
2 GPL ENVIRONMENT (Loads PROGRAM files that otherwise use E/A #5
3 PROGRAM(E/A) (Loads PROGRAM files that are images of E/A #3 object code.
4 LOAD/RUN(E/A) (Loads D/F 80 object files that otherwise use #3 of E/A module.
5 SCRIPTLOADER(Loads predefined sequence of D/F 80 files; needs file SL)
6 LOW MEMORY LOADER (Puts D/F 80 obj files in low mem;needs LL)
7 L&R ALL MEM (Loads auto-starting D/F 80 obj files into mem anywhere.
8 (Not shown on screen. Cancels auto-start of auto-starting D/F 80 object files.)

LOADER MENU. Loads from #3 of Editor Assembler Central Menu. (Requires EA)

Special thanks to Robert Simms, Editor, TI READER, Charlotte, NC TI-99 UG Newsletter March, 1988. FunnelWeb Farms Funlwriter V.4.0 Freeware by Tony & Will McGovern, 215 Grinsell St., Kotara NSW 2288, Australia.

Reformatted by Robert Simms from versions printed in the Lima, Ohio Users Group newsletter.