MILWAUKEE
Home Computer
MICRO
REPORT
SPECIAL CONSTRUCTION ISSUE

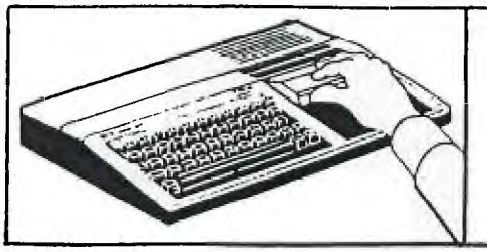

MARCH
1985
EDITION

A BI-MONTHLY PUBLICATION OF THE MILWAUKEE AREA 99/4A USERS GROUP

USER GROUP NEWS

MEETINGS, STORIES, AND MORE . . .

In this issue of MICRO REPORT, we will attempt to give all of you electrical experimenters some projects for peripherals on your TI.

But first, we need to give you a quick review of all of the happenings at the January and February Milwaukee Area TI 99/4A User meetings (particularly for those of you that had to miss them).

In January, the Group got their chance to use their new TI system for the first time. Two demonstrations were given- First, Gene Olig gave a lengthy "show and tell" presentation on the use and creation of sprites. His demo included a good handout, handy for future programming reference. Next-George Kasica gave an informative look at the world of modems, and in particular, how to utilize a database. George "logged on" to Compuserve and gave a quick run through some of the menus on the system. Attendance at this meeting, and a large turnout for membership renewals seemed to show that interest in our TI computer is very high. It was also quite obvious that having demonstrations at our meetings perks the interest of the majority of the Group. Our System looks like a wise investment on behalf of everyone.

At the meeting, the Group also elected new officers, of which a new list of names and phone numbers are printed here in the Milwaukee Micro Report.

The February meeting included a discussion of the policies surrounding the useage of disks and cartridges from our Library. Membership cards will be held, along with a small deposit, for members who wish to use the Group's cartridges. A very small copying fee was instituted for the Disk Library programs. In addition, Peter Radike gave a demonstration of a Tax Deduction Filer program that originated from Home Computer Magazine.

Newly elected President Jerry Trinkl presided over the February meeting, and advised members that we intend to keep up the demonstrations at all of our meetings, but in order to do this, we will need people to continue to volunteer and sign up on our "demo sheet". It has become quite obvious to everyone that these types of presentations are very popular, and draw a great interest in our meetings. CONSIDER SHARING YOUR EXPERIENCES ON A PIECE OF HARDWARE OR SOFTWARE WITH THE OTHER GROUP MEMBERS.

COMP-U-SERVE TUTORIAL

CompuServe:
Consumer Information Service

USING THE HOME SERVICES SECTION

By
George Kasica

In this second installment of the series on CompuServe, I will describe some of the features of the Home Services Section. In this section there are many useful and interesting areas to look at.

In order to get to the Home Services Section you must type GO HOM-1 at any ! prompt. There will be a short pause and then you will see a menu similar to the one in Figure 1. It may be slightly diffrent since the network is constantly changing and expanding in all areas. Well, now to the menu and what it offers for you.

In the first area you can see News/Weather/Sports as a choice. In this option you get to another menu that will allow you to access several daily papers from around the country, as well as the AP Videotex News wire, and AP Sports Wire. These two wire services are updated hourly with the very latest news from all sources, both national and international. Also in this area you will find the NOAA(National Oceanic and Atmospheric Administration)Weather Wire. In this sub-menu you are able to access any of over 700 weather service stations around the country and in other foreign cities like San Juan Puerto Rico. These stations are identified by three letter codes for the specific forecasts(for example Milwaukee is identified by the three letters MKE), and for just a state or area forecast you can type the two letter postal abbreviation for the state(for Wisconsin you would type WI). These forecasts are put out

CONTINUED ON PAGE 2

MILWAUKEE HOME COMPUTER MICRO REPORT

Milwaukee Home Computer MICRO REPORT is published bi-monthly by the Milwaukee Area 99/4A Users Group, located at 2007 N 71ST Street, Wauwatosa, WI 53213. The Milwaukee Area 99/4A Users Group is an association of individuals with the same interest in using, programming,and enjoying their Texas Instruments 99/4A Home Computers. This Users Group is not affiliated with Texas Instruments, nor any other commercial companies or organizations.

Opinions expressed by authors of articles, reviews, or columns do not necessarily reflect those of Milwaukee Home Computer MICRO REPORT. The Editors of this publication reserve all rights to edit or change the original content of articles, columns, reviews, advertisements, endorsements, or other material printed within Milwaukee Home Computer Micro REPORT. ALL the items submitted (except tapes or diskettes) will become full property of this publication. The Milwaukee Micro Report is not responsible for the accuracy of information contained in these pages.

MEMBERSHIP INFORMATION

Membership to the Milwaukee Area 99/4A Users Group is open to anyone who is interested in using and/or programming the Texas Instruments 99/4A Home Computer, and is willing to share his/her fellowship with other members. Annual dues for Individuals - $10.00, Family membership - $15.00 . This fee helps to defray the expense of the publication of this newsletter and provide a library to members for their enjoyment.

MEETING INFORMATION

Meetings of the Milwaukee Area 99/4A Users Group are held on the SECOND SATURDAY each month in the lower level of Wauwatosa Savings and Loan, located at 7500 W. State Street in Wauwatosa, Wisconsin. Meeting times are from about 1:00 PM to 4:00 PM, depending on the content of the meeting for each particular month. Users are encouraged to bring their computers and/or related hardware and software to any of the meetings to assist members in utilizing their own equipment.

USER GROUP OFFICERS:

PRESIDENT - Jerry Trinkl (327-0170)

VICE-PRESIDENT - Milton Giessen (251-2864)

TREASURER - George Kasica (321-7558)

CORRESPONDENCE SECRETARY - Gene Hitz (453-0499)

RECORDING SECRETARY - Jim Steinhart (475-9028)

GROUP LIBRARIANS (DISK)- Steve Sanders (274-4793)
(4PM-11PM)
(CASS)- Fred Pabian (327-3618)

NEWSLETTER
CO-EDITORS - Peter Radike (282-2158)
Gary Pichler (355-2251)

CONTINUED FROM PAGE 1.

usually 4 times daily. There are also features for other types of weather(sports, skiing, severe storms, etc.) that could prove to be useful if you are travelling or going to be skiing.

The second section is called the Reference Library, and it contains an on-line encyclopedia where you can look up anyone of over 15,000 separate articles. This section is constantly changing, so no procedure can be given. There are however numerous help menus that can be gotten in most parts of the CIS network just by typing H at any ! prompt.

The third section of CompuServe, Communications, contains the EasyPlex electronic mail system which has just been in use since January 22. It replaces the old EMAIL system. In EasyPlex, you can send mail to anyone as long as you know their user ID number. As an added feature for those of us with poor memories,(or that loose those inportant little scraps of paper) the EasyPlex system has an Address-book feature where you can store the names and ID numbers of the people you most frequently write to. Also in this section is the famous CIS CB Network. On this network, you can carry on real time conversations by typing back and forth with others on the system all over the country(just like chatting with a SYSOP on one of the local boards). In the CB section you can pick your own handle, and also one of over 40 channels on either CB Band A or CB Band B.

The fourth section, Home Shopping/Banking, is the area where you can conduct on-line shopping through any one of over 200 diffrent stores including Sears, Penny's, Waldenbooks, B. Dalton Books, numerous computer software dealers, record companies for your favorite record lables, and hundreds of other stores. Also here you can do electronic banking if you belong to some of the larger banks in the country. That list is currently being updated so there is no current information.

FIGURE 1

```
[1;1H[2JCompuServe[1;70HPage HOM-1

[5;1HHOME SERVICES

  1 News/Weather/Sports
  2 Reference Library
  3 Communications
  4 Home Shopping/Banking
  5 Discussion Forums
  6 Games
  7 Education
  8 Home Management
  9 Travel
 10 Entertainment
[19;1H[JLast menu page. Key digit
or M for previous menu.[19;30H!
```

The fifth section, the Discussion Forums section is an area that offers the users of CIS a place to discuss their interests or hobbies with others. In it you can find areas ofdiscussion and debate ranging from Cooking to Politics. Currently there are over 600 discussion topics available, so there should be nop trouble finding one or more that suit your interests or hobbies.

The sixth section, Games, is just what it appears to be, numerous on-line games such as an interactive game played with others on-line. One of the most popular is called Mega-Wars-III. Also here are the entire Scott Adams adventure series, and many others. Also there are on-line chess games both against another player or the computer. Role-playing games are also popular and constantly being added to the section.

Section number seven, Education, is an area where you can look up infomation in Grolier's Academic American Encyclopedia, or take the College Board Exam. You can also use interactive programs like a personality analysis or biorythm program in the Multiple Choice area. There are also

CONTINUED ON PAGE 3

CONTINUED FROM PAGE 2

sections there for deaf users, and a section to use the PILOT language to write simple programs for education.

In the eigth section, Home Management, you are able to many things that are useful to people who own homes, or just those in need of simple but useful finance oriented programs. Here you can find a loan amortization program, a net worth program, or a checkbook balancing program. Also there is the IDS Financial Service, newly on-line as of January 22, 1985.

The ninth section is of interest to all those who travel, either around the country or just around the Midwest. Here you can find on-line air schedules for all major carriers, State Department travle advisories for those travelling abroad, a unique section that allows you to make your own reservations at many hotels or even get the best price on airfares and make the reservation immediately. The entire section is menu driven so it is quite easy to use.

The last section, Entertainment, gives you the latest Hollywood news, movie reviews, or video tape information. It also has a section that gives the up-to-the-minute Showtime pay service movie listing.

All in all the Home Services Section has many excellent features to offer the CIS subscriber, and at an excellent value for the information returned.

READING ABOUT TI

The following is a list of publications,their addresses, and a brief description of their contents. All service the TI 99/4A computer owner to one degree or another.

Home Computer Magazine 10 ISSUES PER YEAR
Emerald Valley Publishing Co.
P.O. Box 5537
Eugene,OR 97405

1 Yr. Subscription--$25.00 ($38.00 for 10 mo. on Disk or Tape)
2 Yr. Subscription--$45.00 ($45.00 for 12 mo. on Disk or Tape)
3 Yr. Subscription--$63.00

This is the original (formerly 99er Magazine) TI support magazine. It has a history or irratic publication, but has a great track record for quality programs, articles, and reviews on TI products over the past 4 years. Has a suppliment for ads.

Family Computing Magazine 12 ISSUES PER YEAR
Scholastic Publications
P.O. Box 2512
Boulder,CO 80321

1 Yr. Subscriotion--$19.97

A newer magazine, which services TI, Apple, Commodore, Atari, IBM, and TRS-80. It is more for the beginner, and has only easy and primative programs. Some reviews and articles will surprise you with their quality (once in a while).

Compute Magazine 12 ISSUE PER YEAR
ABC Compute Publications,Inc.
P.O. Box 914
Farmingdale,NY 11737

1 Yr. Subscription--$24.00
2 Yr. Subscription--$45.00

An established magazine, covering the TI, Apple, Commodore, IBM, and ADAM. This one, however, seems to be decreasing in its support of TI users. There use to be an average of 3-4 articles for TI programs in every issue, and now there is usually only 1. The December, 1983 issue has an excellent word processor program for TI, but it's been all downhill from there.

Computer Shopper 12 ISSUES PER YEAR
407 S. Washington Ave.
P.O. BOX F
Titusville,FL 32781-9990

1 Yr. Subscription--$15.00
2 Yr. Subscription--$24.00

This newspaper/magazine services almost all brands of home computers, with special sections dedicated to various brands-including TI. Randy Holcomb is the resident TI writer, and has done various articles on TI hardware and software. He appears to be up to date on the latest developments for our computer. The majority of this publication is advertisements for all sorts of hardware and software-including those for the TI. A good value at this price!

MICROpendium 12 ISSUES PER YEAR
P.O. BOX 1343
Round Rock,TX 78680

1 Yr. Subscription--$18.50 (1st Class Mailing)

This newspaper/magazine premiered in January, 1984, and covers all TI 99/4A products. It is dedicated only to the TI, and has a full assortment of reviews, programs, news product info, and other useful material.

While there are other publications that occasionally have TI related material in them, the ones listed here support our machine on a regular basis. In addition to these magazines, several quality newsletter-type magazines are printed, such as Millers Graphics Newsletter. This one is for advanced programmers in particular, by dealing in Forth and Asseably Language information. Subscriptions are $12.50 per year, and can be ordered from:

Millers Graphics
1475 W. Cypress Ave.
San Dimas, CA 91773

There are currently 76 Milwaukee Area 99/4A Users Group members that have paid 1985 dues. The 1985 dues prices are now ---- $10.00 per individual and $15.00 for the family membership. ONLY PAID DUES MEMBERS can receive the newsletter of the User Group - the Milwaukee Home Computer Micro Report, as well as borrow tapes or disks from the Group Library.

Currently, there are 400 programs in the Library for the use of members. These program tapes and disks may be obtained at User Group meetings by means of presentation of a membership card and fee or deposit (Disk copies are $1.00 if user provides a disk, $3.00 if Group provides one).

The Milwaukee Area 99/4A User Group dues are maintained in the treasury for printing a newsletter and library upkeep.

As of this newsletter publication date, the treasurer is reporting an account balance of $470.00. The treasury is replenished by annual dues payment and RENEWALS. All paid members receive an annual membership card.

Here is a nifty project for the experimenter. Do you have a lot of software that is configured for RS232 yet you have a parallel printer? Well, this little gizmo will output on the serial port making the computer think it is talking to the RS232 and then on this external circuit all the data is converted to parallel for the parallel printer requirements. This circuit produces a CENTRONICS compatible interface. Good Luck.

-REPRINTED FROM THE ATLANTA 99/4A USER GROUP NEWSLETTER

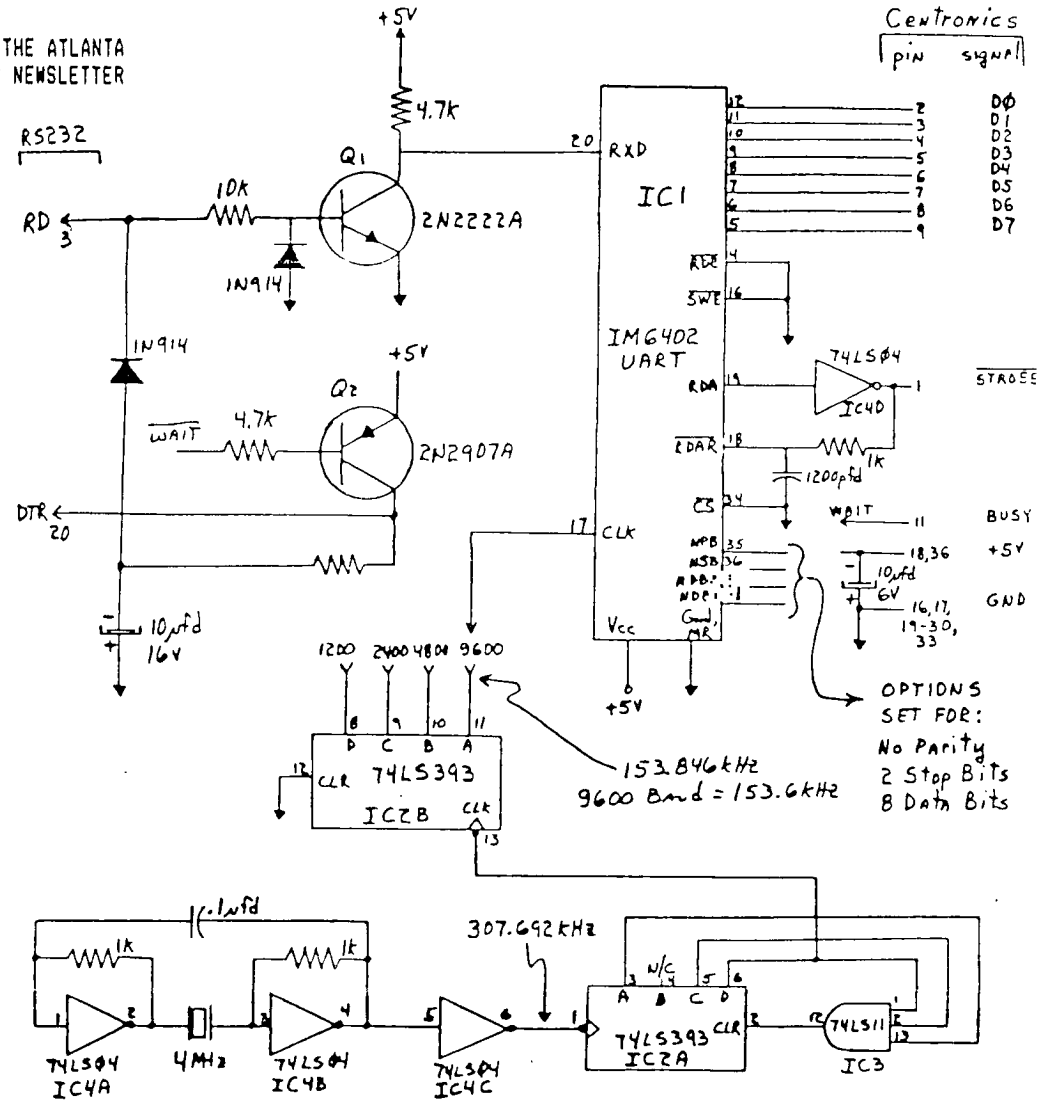

-REPRINTED FROM SOFTEX, THE AUSTRALIA 99/4A NEWSLETTER

USING a BLACK and WHITE MONITOR.

The TI Video output is a color signal but an acceptable B&W monitor picture can be obtained by taking the 2 signals shown below to the monitor input.

Use shielded cable with shielding braid connected to the Ground pin.

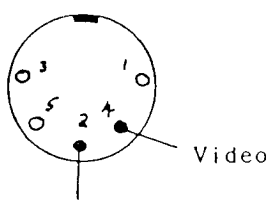

Video connector facing back of computer.

Use what ever plug mates with monitor.

DISK LIBRARY LISTING

DSK2.-DISKNAME= 00001
AVAILABLE= 12 USED= 346

FILENAME	SIZ	TYPE	P
BATTLESTAR	21	PROGRAM	
DARTS	29	PROGRAM	
FTBALLTEAM	25	PROGRAM	
HOTDOG	16	PROGRAM	
LOAD	4	PROGRAM	
POKER	21	PROGRAM	
SPACECMD	38	PROGRAM	
SPACEGEM	11	PROGRAM	
SPACEPILOT	15	PROGRAM	
SPACPATROL	21	PROGRAM	
SPORTS	12	PROGRAM	
STARTREK	29	PROGRAM	
TICTCTOE3D	37	PROGRAM	
TITAN	29	PROGRAM	
ZANQUEST	38	PROGRAM	

DSK2.-DISKNAME= 00002
AVAILABLE= 16 USED= 342

FILENAME	SIZ	TYPE	P
BEELINE	27	PROGRAM	
CROSSFIRE	19	PROGRAM	
CYBERDICE	31	PROGRAM	
FORCEONE	32	PROGRAM	
GOLF	35	PROGRAM	
HELICOPTER	36	PROGRAM	
INVADER	14	PROGRAM	
JACKPOT	39	PROGRAM	
LOAD	4	PROGRAM	
MICROJAWS	7	PROGRAM	
SMILEY	17	PROGRAM	
TICTACTOE	36	PROGRAM	
TRAPSHOOT	15	PROGRAM	
UPSCOPE	30	PROGRAM	

DSK2.-DISKNAME= 00003
AVAILABLE= 255 USED= 103

FILENAME	SIZ	TYPE	P
BOMB	14	PROGRAM	
DUMP	11	DIS/FIX80	
LOAD	6	PROGRAM	
LOADBOMB	9	DIS/FIX80	
LOADMAZE	9	DIS/FIX80	
LOADMOUS	9	DIS/FIX80	
MAZE	11	PROGRAM	
MOUS	13	PROGRAM	
XREF	21	DIS/FIX80	

DSK2.-DISKNAME= 00004
AVAILABLE= 194 USED= 164

FILENAME	SIZ	TYPE	P
CASTLE	21	PROGRAM	
CASTLEOBJ	39	DIS/FIX80	
KING	28	DIS/FIX80	
KINGOBJ	55	DIS/FIX80	
LOAD	2	PROGRAM	
TAPEMAP	19	DIS/FIX80	

DSK2.-DISKNAME= 00005
AVAILABLE= 61 USED= 297

FILENAME	SIZ	TYPE	P
AMERICA	38	PROGRAM	Y
BEEHIVE	29	PROGRAM	
CASHFLOW	30	PROGRAM	
ESCAPE	41	PROGRAM	
JUNGLEJIM	35	PROGRAM	
LOAD	4	PROGRAM	
RACKO	9	PROGRAM	
ROBOCHASE	6	PROGRAM	
SFORM	42	PROGRAM	
SFORMDATA	9	INT/FIX192	
SFORMSUPP	10	PROGRAM	
TAROT	44	PROGRAM	

DSK2.-DISKNAME= 00006
AVAILABLE= 8 USED= 350

FILENAME	SIZ	TYPE	P
AIRDEFENCE	18	PROGRAM	
ALIENATTAK	45	PROGRAM	
BATTLEARTH	28	PROGRAM	
BATTLESEA	46	PROGRAM	
BLOCKADE	42	PROGRAM	
LOAD	4	PROGRAM	
ROCKETS	13	PROGRAM	
SP/JUNKET	23	PROGRAM	
STAR-CORPS	14	PROGRAM	
STARGUARD	37	PROGRAM	
SURVIVAL	40	PROGRAM	
TITREK	40	PROGRAM	

DSK2.-DISKNAME= 00007
AVAILABLE= 36 USED= 322

FILENAME	SIZ	TYPE	P
BATTLEIAP	46	PROGRAM	
BLACKJACK	19	PROGRAM	
CHECKERS	38	PROGRAM	
DEALER	33	PROGRAM	
INDIAN	26	PROGRAM	
LOAD	4	PROGRAM	
MINER	39	PROGRAM	
QUINTUS	24	PROGRAM	
RUBIK-CUBE	20	PROGRAM	
TEX-THELLO	30	PROGRAM	
YAHTZEE	43	PROGRAM	

DSK2.-DISKNAME= 00008
AVAILABLE= 3 USED= 355

FILENAME	SIZ	TYPE	P
ANTIAIR	27	PROGRAM	
ASTROSTORM	12	PROGRAM	
BOAALLEY	17	PROGRAM	
LOAD	4	PROGRAM	
MASTERMIND	20	PROGRAM	
MAZERACE	20	PROGRAM	
MINER	26	PROGRAM	
MISSION	39	PROGRAM	
SIMON	44	PROGRAM	
SPACESCOUT	38	PROGRAM	
SPACEWAR	49	PROGRAM	
STATBASKET	18	PROGRAM	
TUNLVISION	41	PROGRAM	

DSK2.-DISKNAME= 00009
AVAILABLE= 218 USED= 140

FILENAME	SIZ	TYPE	P
LOAD	4	PROGRAM	
OZ	88	INT/VAR254	
OZDATA1	5	INT/FIX40	
OZDATA2	8	INT/FIX20	
OZFILE1	8	PROGRAM	
OZFILE2	11	PROGRAM	
RAINBOW	16	PROGRAM	

DSK2.-DISKNAME= 00010
AVAILABLE= 0 USED= 358

FILENAME	SIZ	TYPE	P
FRTHGAMES1	358	DIS/FIX128	

DSK2.-DISKNAME= 00011
AVAILABLE= 0 USED= 358

FILENAME	SIZ	TYPE	P
FRTHGAMES2	358	DIS/FIX128	

DSK2.-DISKNAME= 00012
AVAILABLE= 24 USED= 334

FILENAME	SIZ	TYPE	P
BOING	13	PROGRAM	
BRAIN	35	PROGRAM	
CADETTE	14	PROGRAM	
CATALOG	5	PROGRAM	
DARKTHINGS	27	PROGRAM	
DEVASTATOR	18	PROGRAM	
DIALAWORD	5	PROGRAM	
FLAK/ATT	17	PROGRAM	
GRISLY	34	PROGRAM	
JUMPER	34	PROGRAM	
LOAD	5	PROGRAM	
MUSIC	5	PROGRAM	
NERMWORM	26	PROGRAM	
PENTOMINOS	13	PROGRAM	
QUATRAIN	26	PROGRAM	
THE/FLY	10	PROGRAM	
WALLSTREET	27	PROGRAM	
WILD/K	20	PROGRAM	

DSK2.-DISKNAME= 00013
AVAILABLE= 61 USED= 297

FILENAME	SIZ	TYPE	P
ALPHABLAST	10	PROGRAM	
BALOONPOP	8	PROGRAM	
BIRDBRAIN	33	PROGRAM	
BLACK/TUNN	14	PROGRAM	
CANNIBALS	22	PROGRAM	
CIRCUS	18	PROGRAM	
CRAZYCLIMB	17	PROGRAM	
HOMEBOUND	46	PROGRAM	
LOAD	5	PROGRAM	
METEORESCU	27	PROGRAM	
PARATROOP	19	PROGRAM	
RABID	10	PROGRAM	
RUNWAY	24	PROGRAM	
SP/DODGE	7	PROGRAM	
TACOMAN	22	PROGRAM	
THRUSTER	15	PROGRAM	

CONTINUED ON PAGE 6

DSK2.-DISKNAME= 00026
AVAILABLE= 3 USED= 355

FILENAME	SIZ	TYPE	P
AMERICA	15	PROGRAM	
CANON	8	PROGRAM	
DOREMESONG	25	PROGRAM	
GLENDYBURK	46	PROGRAM	
GREEN/V&F	69	INT/VAR254	
LOAD	19	PROGRAM	
PUFF/FILE	12	INT/VAR80	
PUFFDRAGON	63	INT/VAR254	
TRAINLOVER	55	INT/VAR254	
YESTERDAY	43	PROGRAM	

DSK2.-DISKNAME= 00027
AVAILABLE= 67 USED= 291

FILENAME	SIZ	TYPE	P
BOAT-SONG	27	PROGRAM	
DUSTINWIND	14	PROGRAM	
LOAD	3	PROGRAM	
LONG&WROAD	19	PROGRAM	
MAINSCREEN	17	PROGRAM	
ORGAN	38	PROGRAM	
PUPPY-TOWN	34	PROGRAM	
R-BOOGIE	17	PROGRAM	
THRILLER	70	INT/VAR254	
VENUS	26	PROGRAM	
W-BOOGIE	26	PROGRAM	

DSK2.-DISKNAME= 00028
AVAILABLE= 313 USED= 45

FILENAME	SIZ	TYPE	P
MUSIC	6	DIS/FIX80	
MUSICSAVE	39	PROGRAM	

DSK2.-DISKNAME= 00029
AVAILABLE= 44 USED= 314

FILENAME	SIZ	TYPE	P
ANTHEM	14	PROGRAM	Y
BESTFILE	12	DIS/VAR80	
BISMARCK	12	PROGRAM	Y
BUTYOUKNOW	22	PROGRAM	Y
CANT/HELP	12	PROGRAM	Y
COOL/WATER	16	PROGRAM	Y
COULD/I	22	PROGRAM	Y
DOVE	20	PROGRAM	
ENDING	6	PROGRAM	Y
GREEN	14	PROGRAM	Y
HALLELUJAH	20	PROGRAM	Y
HOUSTON	29	PROGRAM	Y
LOAD	12	PROGRAM	Y
LOOKN4LOVE	35	PROGRAM	Y
MANDY	14	PROGRAM	Y
PRAYER	34	PROGRAM	Y
WED/SONG	20	PROGRAM	Y

DSK2.-DISKNAME= 00030
AVAILABLE= 24 USED= 334

FILENAME	SIZ	TYPE	P
ABIDE	9	PROGRAM	Y
ASSURANCE	12	PROGRAM	Y
CHILDREN	14	PROGRAM	Y
CLOSERWALK	10	PROGRAM	Y
COMMENTS	8	PROGRAM	Y
ET/FATHER	9	PROGRAM	Y
FINALE	8	PROGRAM	Y
HOLY/HOLY	11	PROGRAM	Y
J/SAVES	10	PROGRAM	Y
JUST	9	PROGRAM	Y
JUSTFILE	11	INT/VAR80	
LOAD	14	PROGRAM	Y
LORDPRAYER	34	PROGRAM	Y
LOVE/LIFT	13	PROGRAM	Y
NEED/THEE	15	PROGRAM	Y
OLD-TIME	14	PROGRAM	Y
OLD/CROSS	15	PROGRAM	Y
ROCK/AGES	9	PROGRAM	Y
SOFTLY	14	PROGRAM	Y
TELLSTORY	10	PROGRAM	Y
WHERE/HE	8	PROGRAM	Y
WHY/ME	23	PROGRAM	Y
WILDWOOD	18	PROGRAM	Y
XMASMEDLEY	36	PROGRAM	Y

DSK2.-DISKNAME= 00031
AVAILABLE= 20 USED= 338

FILENAME	SIZ	TYPE	P
BARTENDER	43	PROGRAM	
COOKIEFILE	28	PROGRAM	
FORM-GEN	28	PROGRAM	
GOLD	4	PROGRAM	
GRAPHMS6	40	PROGRAM	
LIBRARIAN	16	PROGRAM	
LOAD	4	PROGRAM	
MAILINGLST	26	PROGRAM	
RECORD	24	PROGRAM	
RULEOF78	24	PROGRAM	
SECRETARY	37	PROGRAM	
SPEAKSPELL	6	PROGRAM	
SPEECH	13	PROGRAM	
SPEECHSUFX	8	PROGRAM	
TYPING	9	PROGRAM	
WORDPROC	28	PROGRAM	

DSK2.-DISKNAME= 00032
AVAILABLE= 7 USED= 351

FILENAME	SIZ	TYPE	P
DIAG/PART2	16	DIS/VAR80	
DIAGNOS/1	60	DIS/FIX80	
DIAGNOS/2	15	DIS/FIX80	
DIAGNOSTIC	80	DIS/VAR80	
DISKD	49	DIS/FIX80	
EXPBOX	5	PROGRAM	
LOAD	4	PROGRAM	
MEMEX	9	DIS/FIX80	
P/CODE	14	DIS/FIX80	
PRINTER	7	PROGRAM	
PRINTER#2	9	PROGRAM	
RS232	12	PROGRAM	
RS232/2	22	DIS/FIX80	
RS232/SOU	30	DIS/VAR80	
SPEECH	16	PROGRAM	
TP	3	PROGRAM	

DSK2.-DISKNAME= 00033
AVAILABLE= 14 USED= 344

FILENAME	SIZ	TYPE	P
BIT2	6	DIS/FIX80	
BITMAP	14	DIS/VAR80	
PROG	1	DIS/FIX0	
TE3/DOC	10	DIS/VAR80	
TE30	54	DIS/FIX80	
TE3S	9	DIS/VAR80	
TE3S1	76	DIS/VAR80	
TE3S2	35	DIS/VAR80	
TE3S3	35	DIS/VAR80	
TERMEX	32	DIS/FIX80	
TERMEXDOCS	23	DIS/VAR80	
WINDOW	14	DIS/VAR80	

DSK2.-DISKNAME= 00034
AVAILABLE= 0 USED= 358

FILENAME	SIZ	TYPE	P
FRTHCOPIER	358	DIS/FIX128	

DSK2.-DISKNAME= 00035
AVAILABLE= 25 USED= 333

FILENAME	SIZ	TYPE	P
80-READER	5	PROGRAM	
CALENDAR	11	PROGRAM	
DEFTABLE	15	PROGRAM	
DISASSM/S	80	DIS/VAR80	
DISKMAP	22	DIS/VAR80	
E/ADIS	20	DIS/FIX80	
LOAD	15	PROGRAM	
MINIMEM	14	PROGRAM	
MMDIS	20	DIS/FIX80	
TI#DSKFIXR	49	DIS/FIX80	Y
TIMER	7	DIS/FIX80	
TIMER/S	35	DIS/VAR80	
XBDIS	40	DIS/FIX80	

DSK2.-DISKNAME= 00036
AVAILABLE= 3 USED= 355

FILENAME	SIZ	TYPE	P
DEMO/PLDMP	6	PROGRAM	
DSRLNK	7	DIS/FIX80	
DSRSOURCE	12	DIS/VAR80	
DUMP	10	DIS/FIX80	
DUMPSOURCE	32	DIS/VAR80	
JUSTFY	6	DIS/FIX80	
JUSTFYSRCE	24	DIS/VAR80	
LOAD	4	PROGRAM	
LOGO	10	DIS/FIX80	
LOGOSOURCE	26	DIS/VAR80	
PLOT	9	DIS/FIX80	
PLOTSOURCE	40	DIS/VAR80	
QUICKSRC	15	DIS/VAR80	
RECSCR	5	DIS/FIX80	
RECSCR/S	15	DIS/VAR80	
SAVSCR	6	DIS/FIX80	
SAVSCR/S	15	DIS/VAR80	
SCREENS	3	PROGRAM	
SCROLL	9	DIS/FIX80	
SCROLLDEMO	8	PROGRAM	
SCROLLSRCE	32	DIS/VAR80	
SORT	9	DIS/FIX80	
SORTDEMO	5	PROGRAM	
TEXTJUSTFY	4	PROGRAM	
TIME	10	PROGRAM	
VDP	6	DIS/FIX80	
VDPDEMO	7	PROGRAM	
VDPSOURCE	10	DIS/VAR80	
VENUS	10	PROGRAM	

CONTINUED ON PAGE 7

DSK2.-DISKNAME= 00037
AVAILABLE= 78 USED= 280

FILENAME	SIZ	TYPE	P
LOAD	6	PROGRAM	
LOAD2	22	PROGRAM	
LOAD3	12	DIS/FIX80	
SBUG	97	DIS/FIX80	
SBUGC	45	DIS/FIX80	
SBUGHELP	59	DIS/VAR80	
TIWORDPROC	39	PROGRAM	

DSK2.-DISKNAME= 00038
AVAILABLE= 31 USED= 327

FILENAME	SIZ	TYPE	P
CARDFILE	50	INT/VAR254	
COLORALIGN	33	PROGRAM	
DIRECTORY	4	PROGRAM	
LOAD	3	PROGRAM	
MASSCOPY	17	DIS/FIX80	
RX-KINETIC	68	INT/VAR254	
SNAPCALC	31	PROGRAM	
SPRITER	22	PROGRAM	
SUPERGRAPH	22	PROGRAM	
TAXDEDUCTS	23	PROGRAM	
TINYPLAN	41	PROGRAM	
VERBOSE	13	PROGRAM	

DSK2.-DISKNAME= 00040
AVAILABLE= 0 USED= 358

FILENAME	SIZ	TYPE	P
DEFAULT	9	DIS/FIX80	
DRIVE#	5	PROGRAM	
LDSRLNK	8	DIS/VAR80	
LINIT	17	DIS/VAR80	
LIST/TXT	4	DIS/VAR80	
LISTOBJ	23	INT/FIX255	
LKEY	13	DIS/VAR80	
LMOVBUF	10	DIS/VAR80	
LPARAM	35	DIS/VAR80	
LPRINT	25	DIS/VAR80	
LREF	55	DIS/VAR80	
LTABLES	25	DIS/VAR80	
MAINLIST	43	DIS/VAR80	
NEATDOC	72	DIS/VAR80	
NEATDOCBAS	3	PROGRAM	
NEATLIST	11	DIS/FIX80	

DSK2.-DISKNAME= 00041
AVAILABLE= 172 USED= 186

FILENAME	SIZ	TYPE	P
BLOCKLET	28	PROGRAM	
DIRECTORY	4	PROGRAM	
FACTOR-FOE	35	PROGRAM	
HANGMAN	26	PROGRAM	
HEBREWTYPE	20	PROGRAM	
MAP	37	PROGRAM	
SPELL_TE2	15	PROGRAM	
STATES	21	PROGRAM	

DSK2.-DISKNAME= 00046
AVAILABLE= 9 USED= 349

FILENAME	SIZ	TYPE	P
ALPHABET	21	PROGRAM	
AMERICA	38	PROGRAM	
CANADA	39	PROGRAM	
DIRECTORY	4	PROGRAM	
MYSTRYSPEL	42	PROGRAM	
OUTLINER	32	PROGRAM	
QUIZMAP	31	PROGRAM	
SAY&SPELL	44	PROGRAM	
WISCOUNTYS	56	INT/VAR254	
WORD-WORLD	42	PROGRAM	

DSK2.-DISKNAME= 00047
AVAILABLE= 94 USED= 264

FILENAME	SIZ	TYPE	P
BANKING	32	PROGRAM	
LOAD	4	PROGRAM	
STK/SAMPLE	168	INT/FIX80	Y
STOCK	21	PROGRAM	
STOCKPART2	39	PROGRAM	

DSK2.-DISKNAME= 00051
AVAILABLE= 0 USED= 358

FILENAME	SIZ	TYPE	P
FORTH	6	DIS/FIX80	Y
FORTHSAVE	39	PROGRAM	Y
SYS-SCRNS	313	DIS/FIX128	Y

DSK2.-DISKNAME= 00052
AVAILABLE= 108 USED= 250

FILENAME	SIZ	TYPE	P
ASMSRC	2	DIS/VAR80	
ASMSRC1	58	DIS/VAR80	
ASMSRC2	73	DIS/VAR80	
ASMSRC3	64	DIS/VAR80	
FORTH2	53	DIS/FIX80	

DSK2.-DISKNAME= 00053
AVAILABLE= 178 USED= 180

FILENAME	SIZ	TYPE	P
BOOT	21	DIS/VAR80	
BOOTBJ	6	DIS/FIX80	
DRIVER	98	DIS/VAR80	
UTILEQU	3	DIS/VAR80	
UTILRAM	4	DIS/VAR80	
UTILROM	48	DIS/VAR80	

DSK2.-DISKNAME= 00056
AVAILABLE= 0 USED= 358

FILENAME	SIZ	TYPE	P
P#EDIT-FIL	358	DIS/FIX128	

DSK2.-DISKNAME= 00057
AVAILABLE= 0 USED= 358

FILENAME	SIZ	TYPE	P
P#ASM-LINK	358	DIS/FIX128	

DSK2.-DISKNAME= 00058
AVAILABLE= 0 USED= 358

FILENAME	SIZ	TYPE	P
P#COMPILER	358	DIS/FIX128	

DSK2.-DISKNAME= 00059
AVAILABLE= 0 USED= 358

FILENAME	SIZ	TYPE	P
P#UTILITY	358	DIS/FIX128	

DSK2.-DISKNAME= 00061
AVAILABLE= 27 USED= 331

FILENAME	SIZ	TYPE	P
1-PRINTART	5	PROGRAM	
84CALENDAR	15	DIS/VAR80	
ANDY/CAPP	20	DIS/VAR80	
CBROWN/CAL	50	DIS/VAR80	
CHAR/BROWN	35	DIS/VAR80	
DAVID	44	DIS/VAR80	
DAWG	41	DIS/VAR80	
FLYING/ACE	29	DIS/VAR80	
HOLLHOBBIE	30	DIS/VAR80	
KIRK	27	DIS/VAR80	
LINUS	30	DIS/VAR80	
LOAD	5	PROGRAM	

DSK2.-DISKNAME= 00062
AVAILABLE= 15 USED= 343

FILENAME	SIZ	TYPE	P
2-PRINTART	5	PROGRAM	
DAWG	1	DIS/VAR80	
LOAD	19	PROGRAM	
MICKEY/MSE	17	DIS/VAR80	
MICKEYMSE	1	DIS/VAR80	
PAC-MAN	18	DIS/VAR80	
PHANTOMJET	19	DIS/VAR80	
PINKPANTHR	18	DIS/VAR80	
PLUTO	22	DIS/VAR80	
RETURN/PP	32	DIS/VAR80	
SCHRODER	15	DIS/VAR80	
SNOOPYBLAH	18	DIS/VAR80	
SPOCK	28	DIS/VAR80	
TWEETIE	32	DIS/VAR80	
VALENTINE	44	DIS/VAR80	
WARM/PUPPY	54	DIS/VAR80	

DSK2.-DISKNAME= 00063
AVAILABLE= 2 USED= 356

FILENAME	SIZ	TYPE	P
BEAU	45	DIS/FIX80	
CASSY	38	DIS/FIX80	
JANE	49	DIS/FIX80	
LOAD	4	PROGRAM	
MAKEYRMARK	37	PROGRAM	
MORG	43	DIS/FIX80	
PLAY	47	DIS/FIX80	
ROXA	49	DIS/FIX80	
SENDDATA	4	PROGRAM	
TANYA	40	DIS/FIX80	

DSK2.-DISKNAME= 00064
AVAILABLE= 46 USED= 312

FILENAME	SIZ	TYPE	P
FINALE	18	PROGRAM	
LOAD	2	PROGRAM	
R	4	PROGRAM	
SH/1	35	PROGRAM	
SH/2	52	INT/VAR254	
SHUTTLE	87	INT/VAR254	
ST	36	PROGRAM	
STAR	27	DIS/VAR163	
STAR#	19	PROGRAM	
TITLE	32	PROGRAM	

CONTINUED ON PAGE 8

```
DSK2.-DISKNAME= 00065
 AVAILABLE= 173  USED= 185
 FILENAME  SIZ    TYPE     P
---------- --- ---------- -
BOAT1        5 PROGRAM
BOAT2        5 PROGRAM
CIRCLE       2 PROGRAM
COPYRIGHT1   3 PROGRAM
COPYRIGHT2   3 PROGRAM
COPYRIGHT3   4 PROGRAM
DIR          4 PROGRAM
EZPRINT     16 PROGRAM
FONTSTYLES   8 PROGRAM
GRAPHICS     7 PROGRAM
LOAD         6 PROGRAM
MACRO        3 PROGRAM
MAP          2 PROGRAM
NAMEWAVE     3 PROGRAM
PARAGRAPH    3 PROGRAM
PRINTMAZE   21 PROGRAM
PRINTSOFT   46 PROGRAM     Y
SMILE        3 PROGRAM
TILDE        2 PROGRAM
VERTSPACE    3 PROGRAM
WRDSRCH1    11 PROGRAM
WRDSRCH2    20 PROGRAM
WYOMING      5 PROGRAM

DSK2.-DISKNAME= 00066
 AVAILABLE= 57  USED= 301
 FILENAME  SIZ    TYPE     P
---------- --- ---------- -
DOC/BAS      3 PROGRAM
DUMPCB      13 DIS/FIX80
DUMPDOC     60 DIS/VAR80
DUMPXB      28 DIS/FIX80
DUMPXB/TXT 121 DIS/VAR80
LINPUT       6 PROGRAM
LOAD         4 PROGRAM
UTILITY      9 PROGRAM
dprint      57 DIS/FIX80

DSK2.-DISKNAME= 00071
 AVAILABLE= 67  USED= 291
 FILENAME  SIZ    TYPE     P
---------- --- ---------- -
CHARA1       9 PROGRAM
EDITA1      33 PROGRAM
EDITA2       6 PROGRAM
FORMA1      33 PROGRAM
FORMA2      15 PROGRAM
FORMA4800A  33 PROGRAM
FORMA4800B  15 PROGRAM
MPBASE      41 PROGRAM
MPCHAR       9 PROGRAM
MPDATA      33 PROGRAM
MPINTR      33 PROGRAM
OVERLAY     31 INT/FIX128

DSK2.-DISKNAME= 00075
 AVAILABLE= 16  USED= 342
 FILENAME  SIZ    TYPE     P
---------- --- ---------- -
AUG99       46 DIS/VAR80
AUG99/2     84 DIS/VAR80
AUG99/3     73 DIS/VAR80
AUG99/4     67 DIS/VAR80
AUG99/5     72 DIS/VAR80

DSK2.-DISKNAME= 00076
 AVAILABLE= 155  USED= 203
 FILENAME  SIZ    TYPE     P
---------- --- ---------- -
BBS_NO'S    17 DIS/VAR80
CALL_LOADS  15 DIS/VAR80
CURSEA       4 DIS/VAR80
DEFSTATE    10 PROGRAM
DISK_INFO   31 DIS/VAR80
FORTH_TIPS   9 DIS/VAR80
GEMINI_10X   6 PROGRAM
SUBA-OBJ     9 DIS/FIX80
SUBDEMO     20 PROGRAM
SUBFILE-A   36 DIS/VAR80
TEXT_TRANS   3 PROGRAM
TIBBS_NO'S  19 DIS/VAR80
TRANSLATE2  17 PROGRAM
WRITERINFO   7 DIS/VAR80

DSK2.-DISKNAME= 00077
 AVAILABLE= 0  USED= 358
 FILENAME  SIZ    TYPE     P
---------- --- ---------- -
FORTHTIPS  358 DIS/FIX128
|-----------------------------------------
| SECTORS: 2636 AVAILABLE, 14190 USED   |
-----------------------------------------
| TOTALS: 47 DISKS, 474 PROGRAMS        |
-----------------------------------------
```

FORTH INFORMATION CENTER

The latest word is that with our groups preoccupation and expertise with TI-FORTH, we have been deginated as the National TI-FORTH Information Center. Sounds like more mail for Gene Hitz to answer.

PASCAL SIG GROUP FORMED

Jim Steinbert, our Secretary, who claims that he [illegible] a small ransom for a Pascal [illegible] Spremuer, and Gary [illegible], who just got his hands on a card last month, have started a Pascal SIG. Next meeting will be at Gary's house April 13 following the regular club meeting. Anyone who knows anything about the TI implimentation of Pascal is asked to pass along some of their wisdom. Especially needed is advise on how to convert the standard TI Display/Var 80 files to something that can be read in Pascal.

FORTH National Clearing House
2007 N. 71 St.
Wauwatosa WI 53213

Tutorials	UG source	Pages
Beginning	NSP	3
Customizing	Edmonton	2
Disk Fixer	Edmonton	2
Loops	NewHorizon	1
Parameters	Dimensions	1
FileTranV80	Milwaukee	1
Arrays	Milwaukee	3
DS-DD	Milwaukee	2

Public Domain Disks

TI FORTH System
TI FORTH Source A
TI FORTH Source B
TI Graphics/Sound Demo
Data I John Volk R1 B291 VanBuren Ark 72956
Data II " " " " "
Data III National Clearing House
XB forth loader
To cover costs of Disks Mailers Postage & Xerox
Tutorials $ .10 / page
Disks $ 3.00
FORTH Manuals $20.00

Data I	Data II	Data III
Number guess	Disk-init	DiskInit SSSD
Moire pattern	Disk/screen	DiskInit DSSD
Sprite demo	Screen/disk	FastCopy 1/2 dr
Poem	Clone2/3drive	DiskCataloger
Real time clock	Disass	Kibbit
Airplane shoot	XB-Forth	Shoot 999M game
Battlestar	PrinterCommands	Number Race(2-P)
Diamond draw	Game of life	DiskFixer
Dots & lines	SpeechRes	DSR Peeker
Crazy quilts	Circle	-EDITOR auto/rpt
Move a block	Aquarium	& more coming
Suicide Ships	Breakforth	
Nuke attack	ISR Clock	
1 drive copier	Micro-Jaws	
MiniForthWriter	3 pass copyer	
ForthCopyWord	ScreenDump	
MostUsedWords	Disk/list	
	& more	

data II
also almost full already

auto decimal screen commands
64 support thru sound interface
file transfer

We welcome any public domain submissions

Milwaukee Area 99-4 Users Group
2007 N. 71
Wauwatosa, WI 53213

Edmonton 99 UG
box 11983
Edmonton Alberta
Canada T5J-3L1